GE
Industrial Solutions

WORLDWIDE PARTNER

New

EntelliGuard™ G

Ed. 04

Power Circuit Breaker
Uncompromising, Fast and Selective

GE imagination at work

Unelec Equipment
www.unelec-equipment.com
Tel: +1 319 244 84 69 UeeS Co. Tel: +1 650 466 86 39
Info@unelec-equipment.com

2 Product Identification
3 Features
9 Total Solution
10 Performance Ratings

Unelec Equipment
www.unelec-equipment.com
Tel: +1 319 244 84 69 UeeS Co. Tel: +1 650 466 86 39
Info@unelec-equipment.com

Product Identification

Power Circuit Breaker Front Facia

1. Installed Accessory Indicators
2. Electronic Trip Unit
3. Manual Charging Handle
4. ON and OFF Buttons
5. Contact Position Indicatior
6. Ready to Close Indicator
7. Spring charged Indicator
8. Operation Counter
9. Prevision for Key Lock
10. Global Catalogue Number

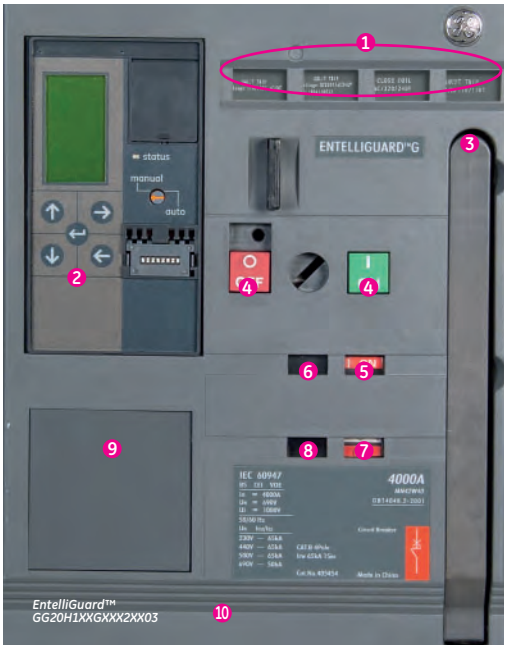

Power Circuit Breaker label

1. Product Type
2. Bar code with Manufacturing data
3. Colour Code indicating Interruption Tier
4. Voltage Ratings
5. Current Ratings
6. Certification & Standards
7. Short-circuit Interruption data
8. Manufacturing Date

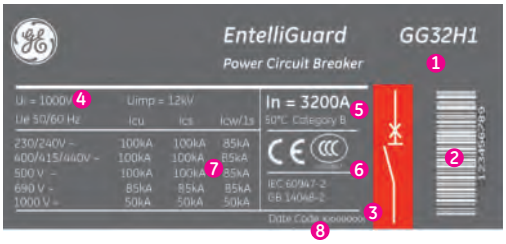

Advanced Electronic Trip Unit

1. Main Screen with the following choices:
   Setup
   Allows adjustment of values and setting of all Parameters
   Meter
   Full measurement values are displayed
   Status
   Breaker and Trip Unit position
   Events
   History of Trip's with indication of fault reason and level and access to the Waveform Capture function
2. Cursor driven setting system
3. Manual or Automatic Reset Choice
4. Full Range Rating Plug

Unelec Equipment
www.unelec-equipment.com
Tel: +1 319 244 84 69 UeeS Co. Tel: +1 650 466 86 39
Info@unelec-equipment.com

Power Circuit breakers

Uncompromising Fast & Selective

EntelliGuard™ Power Circuit Breakers are a new line of Air Circuit Breakers evolved from the existing M-PACT & ME07 types to offer a truly global product platform meeting IEC, ANSI and UL standards.

A line of Three and Four pole devices ranging from 400 to 6400Amp in four basic envelopes with fault interruption ratings of up to 150kAmps. A design offering a unique combination of High Fault current withstand ratings, short fault interruption time and selectivity.

The device includes the new state-of-the-art EntelliGuard™ trip unit that enables the circuit breaker with the latest technology for system safety, reliability, measurement, relaying and communications using the Modbus or Profibus protocol.

Contents

Hi-Performance Complete Line

Selective and Fast

Uncompromising

State of the Art Protection
The Global Trip Unit

Easy to use & Flexible
Installation options

Common, Field Mountable
Accessories

A Full Solution for
Low Voltage Distribution

Cat
This
Pov
ple
Unelec Equipment
www.unelec-equipment.com
Tel: +1 319 244 84 69 UeeS Co. Tel: +1 650 466 86 39
Info@unelec-equipment.com

Hi-Performance: Complete Line

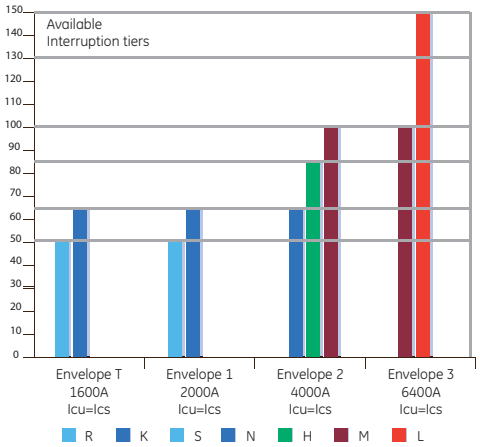

Hi-Performance: Complete Line

The EntelliGuard™ range of Power Circuit breakers encompasses a line of Three and Four pole Air Circuit Breakers with Nominal Currents ranging from 400 to 6400Amp in four basic envelopes.

All Power Circuit Breakers are designed to allow multiple interruptions of fault currents. Here the tested and certified Service Breaking capacity value is in all cases equal to the stated Ultimate Breaking Capacity.

Envelope T can be used in networks with voltage up to 690V and can be acquired with current ratings from 400A to 1600A Amps at 50°C. This type is available in interruption ratings (Ics=Icu) of 50 and 65kA.

Envelope 1 can be used in networks with voltages up to 1000V and can be acquired with current ratings from 400 to 2000Amps at 50°C.
This type is available in interruption ratings (Ics=Icu) of 50 and 65kA.
A version suitable for DC applications is available.

Envelope 2 can be used in networks with voltages up to 1000V and can be acquired with current ratings from 400 to 4000Amps at 50°C.
This type is available in interruption ratings (Ics=Icu) of 50, 65, 85 and 100kA. A version suitable for DC applications is available.

Envelope 3 can be used in networks with voltages up to 1000V and can be acquired with current ratings from 3200 to 6400Amps at 50°C.
This type is available in interruption ratings (Ics=Icu) of 100 and 150kA.
A version suitable for DC applications is available.

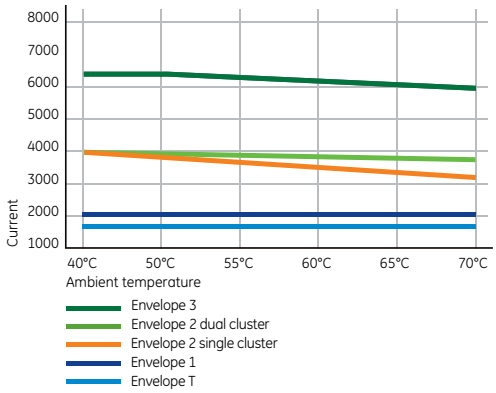

Hi-Performance: Current Ratings in Enclosures

One of the most important user parameters is not the nominal rating of an 'Air Circuit Breaker' in free air but its current Rating within a panel or enclosure.

Breakers 'enclosed ratings' are determined by the heat dissipation produced by the device and its ability to carry current at the temperature within the enclosure.

EntelliGuard™ Power Circuit breakers have been designed with low Power dissipation values and allow relatively high currents at high ambient temperatures. This is applicable for breakers in the fixed and draw-out pattern as indicated in the graph insert.

For extreme cases a special dual cluster draw-out version of an envelope 2 breaker is available allowing a very limited derating when the breaker is used at high ambient temperatures within an enclosure.

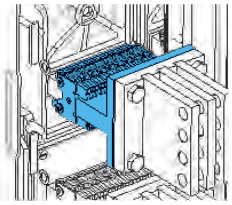

Standard Draw-out
Construction
'Single Cluster'

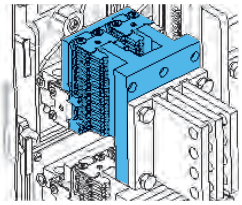

'Limited de-rating'
Draw-out Construction
'Dual Cluster'

Unelec Equipment
www.unelec-equipment.com
Tel: +1 319 244 84 69 UeeS Co. Tel: +1 650 466 86 39
Info@unelec-equipment.com

Selective, Fast & Uncompromising

Selective & Fast

EntelliGuard™ has been designed to offer an uncompromising combination of a fast interruption at high fault levels attaining values of 40 Milliseconds or less whilst maintaining selectivity.

Power Circuit Breakers are designed to remain closed on a fault. This for at a user settable time value when the fault level lies within the range of the Short Time Delayed protection device AND for 15 Milliseconds when the fault level attains the Instantaneous protection range value.

This Instantaneous device includes programming that in normal circumstances waits until the downstream breaker trips.

Speed WHEN needed ... Warrantied selectivity elsewhere

The simplest, standard, Electronic Trip Unit, has a broad range of timed bands at all overcurrent levels. Thus attaining selectivity between closely rated devices and across multiple distribution levels. This strongly simplifies and economizes installation design.

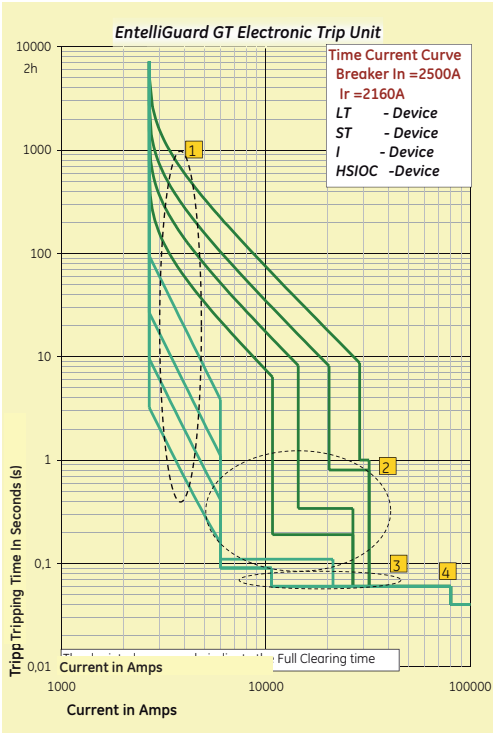

1. Overload Protection (LT) with 44 bands
2. Timed Short-circuit Protection (STD) with 17 bands
3. Selective Instantaneous Protection (I)
4. Hi-Speed trip (HSIOC)

Uncompromising ... Reliability

EntelliGuard™ has been designed as a Modern 'Power Circuit Breaker' without neglecting its and GE's heritage of more than 50 years in building Air Circuit Breakers.

These Power Circuit Breakers uncompromisingly combine the properties of the older M-PACT 1 and 2, ME07 and Wavepro lines with modern state of the art technology.

The result: a device that with a proven Electrical and Mechanical life span independent of its operation mode. Be it manual, electrical or by means of the installed Shunt and/or Undervoltage releases.

Uncompromising ... Safety

In order to protect Service Personnel against the hazards of Short Circuits whilst working on a Power Distribution system EntelliGuard™ Power Circuit breakers can be equipped with a so called RELT switch input.
This allows the breaker to be switched to its lowest Short-circuit settings on service, thus limiting the hazards concerned.

The RELT switch input (with feedback) is available on the breaker auxiliary terminals or can be accessed through the communication bus.

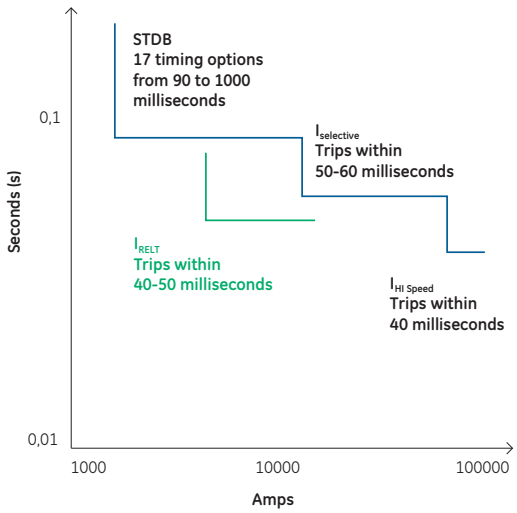

Unelec Equipment
www.unelec-equipment.com
Tel: +1 319 244 84 69 UeeS Co. Tel: +1 650 466 86 39
Info@unelec-equipment.com

Protection with
State of the Art Trip Units

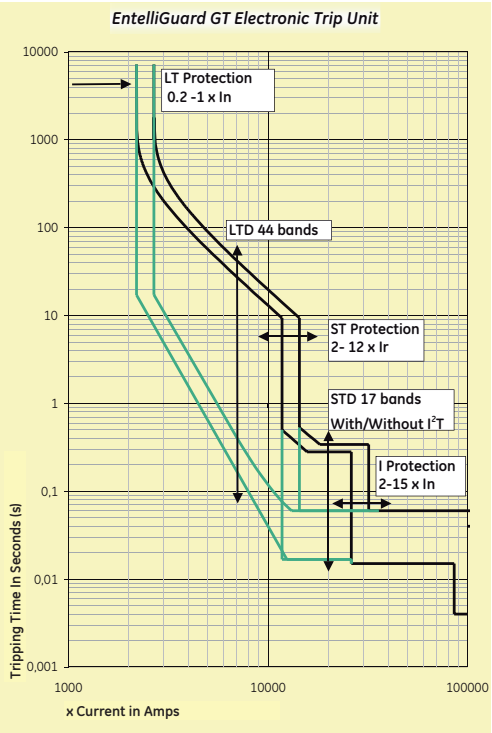

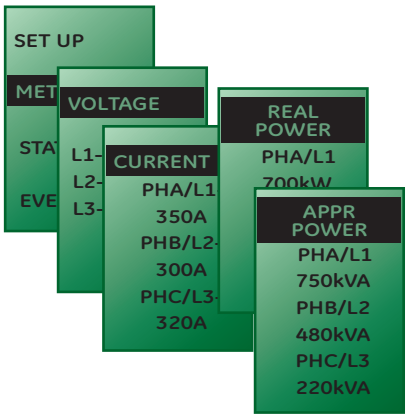

State of the Art Electronic Trip Unit

All EntelliGuard™ Power Circuit Breakers are equipped with a digital electronic trip unit, available in four basic versions: E, S, N and H. Each has a common design that comes with a screen providing an ammeter and allowing a simple and accurate menu-driven adjustment of the breaker parameters across a broad current range.

All functionality is menu-driven accessed by using 4 setting and one enter key thus allowing a fast and accurate setting of the device. The user can set the device to an automatic or manual reset after a fault.

After inserting the rating plug, the device can be adjusted and the installed options set. As this normally occurs when the installation is not powered up, the use of the separately available TESTER with Power Pack is advised.

Main adjustment Options

LT-LTD protection
Each device has an overload setting or LT setting range of 0.2 to 1 times the breaker rating with a choice of more than 60 setting points. The overload protection comes with up to 90 time band settings in 5 distinct curve models allowing the user to configure this device for almost any perceivable application.

ST-STD protection
A time delayed Short-circuit protection is installed with an adjustment range of 2 to 12 times the set LT current values. The Short-circuit interruption time can be set, at one of 17 bands ranging from 90 Milliseconds to 1 second.

I protection
A switchable instantaneous protection can be optionally installed. This device is adjustable from 2 to 15 or 30 times the rating of the breaker and is programmed to wait for downstream devices to trip before reacting.

Other protection features
A host of other protection devices as LT-B & LT-C, RELT, GF sum & GF source return, Earthfault (UEF, REF & SEF), extensive protective relays options plus the optional use of energy curves are available (see section B of this catalogue).

Measurement, Relaying & Communication
The EntelliGuard™ Trip Unit has been envisaged to provide the user with more. Optionally a full network measurement device can be installed on the device. Relays can be included to trip the breaker on Voltage Unbalance, Current Unbalance, Power reversal etc.

The device can be equipped with Communication for use with the Modbus or Profibus protocol whilst events as Overload, Short-circuit and Groundfaults can be tracked. Optionally the user can portray a Short-circuit event through the Wave Form Capture option.

Plug 'n Play
Electronic Trip Units are normally supplied factory fitted. However spares are available that plug into the breaker, automatically read the main breaker data and adjust themselves automatically to the breaker type.

This option can be used to allow Field replacement or Upgrades of

Unelec Equipment
www.unelec-equipment.com
Tel: +1 319 244 84 69 UeeS Co. Tel: +1 650 466 86 39
Info@unelec-equipment.com

Power Circuit Breakers
Easy to Install & Versatile

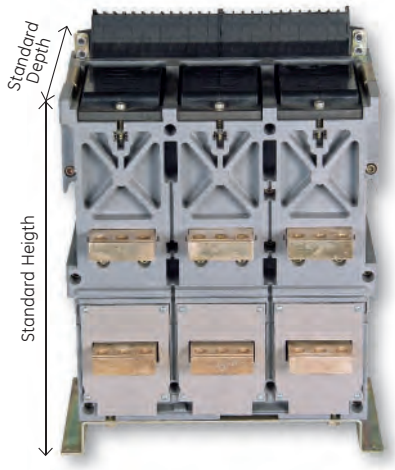

Easy to Install

EntelliGuard™ Power Circuit Breakers are available in a fixed and draw-out pattern. Each pattern offering the highest possible current rating when enclosed in a panel or equipment.

Independent of the number of poles, rated current or interruption rating, each of the two patterns has a common height, depth and cut-out dimension. This strongly simplifying the design of panels and equipment in which these devices are used[1].

The basic breaker width has been optimized to allow for space to connect in- and outgoing bus bars and cables. Both Fixed and Draw-out Power Circuit Breaker types are supplied with rear connections suitable for Rear Access Horizontal busbar connection.

The breakers are installed by using easily accessible mounting brackets, the drilling pattern of which exactly matches that of the previous M-PACT line.

All accessories are wired out to an easy to access 39 or 78 pole terminal strip mounted on the breaker top. These terminals are amply sized to allow the use of up to 2.5 mm² cabling and can be used with standard connection materials or AMP type plug connectors.

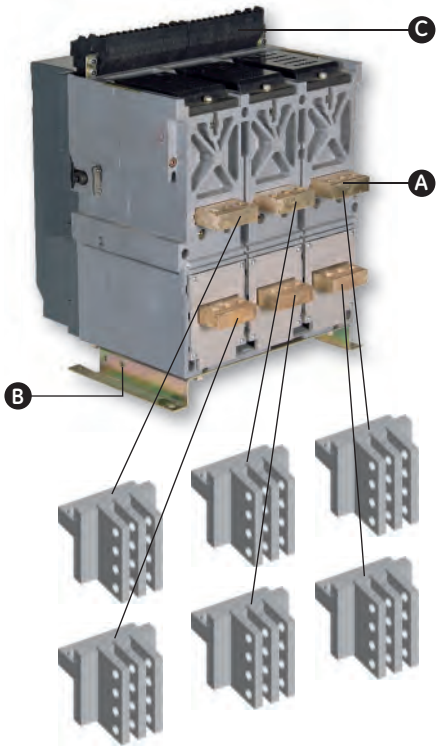

Flexible ... Kit Form

A Power Circuit Breaker is normally supplied completely fitted OFF works. However the unique modular construction and field mountable Trip Unit and Accessories option can be used to acquire a breaker in kit form and to customize the device locally[2].

Flexible ... Connections
Besides the standard horizontal connection options multiple other options are available.

Power Circuit Breakers supplied in a fixed pattern can be optionally supplied with Rear Vertical connections or Front access connections[3].

The Cassettes of the Breakers in draw-out pattern are supplied with T or L stubs suitable for Horizontal Bubar connection. However these stubs can be rotated 90 degrees allowing the user to change the cassette connection option from Horizontal to Vertical Busbars.
A 2nd cassette version is available allowing Front access Connection[3].

A Standard Horizontal Rear Connections
B Mounting Bracket
C Terminal strip

(1) The width does vary
(2) With GE training
(3) Maximum 4000Amps

Unelec Equipment
www.unelec-equipment.com
Tel: +1 319 244 84 69 UeeS Co. Tel: +1 650 466 86 39
Info@unelec-equipment.com

Common Field Mountable Accessories

Common internal accessories
A large range of internal accessories as Electrical Operators, up to four Shunt Releases, Closing Coils or Undervoltage releases, Interlock Coils, Auxiliary and Alarm contacts, Carriage switches, Coil indication contacts and Breaker status switches are available.

The Power Circuit Breaker front Facia includes 'Pop up' indicators that provide the user with an overview as to which accessories are installed in the device.

Each of these devices can be acquired factory fitted or is available in a field mountable execution. The design is common to all four envelopes.

1. Electrical Operator
2. Bell Alarm Switch
3. A max of 4 Closing Coils, Shunt or Undervoltage releases
4. Electronic Trip Unit
5. A maximum of 8 Auxiliary Switches
6. Ready to close or Spring Charged contact

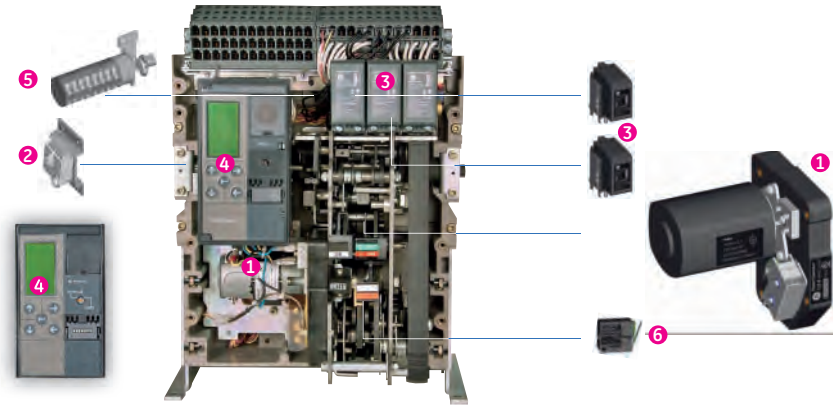

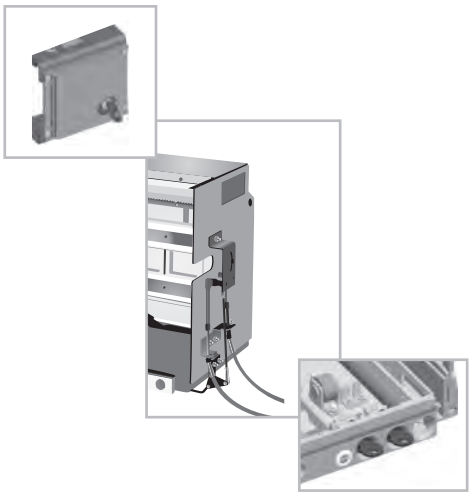

Common External Accessories
Multiple common external accessories are available, a full overview of which can be found in section C of this catalogue.

On the left the Key lock and breaker interlock options are portrayed. Here up to four Ronis, Profalux or Castell locks can be used to lock the breaker, and up to two Ronis or Profalux locks to lock the draw-out breaker in its cassette.

Optionally groups of two or three Power Circuit Breakers in Fixed or draw-out pattern can be interlocked. This in several different configurations, allowing the user to build an incoming power supply of multiple breakers to his own requirements.

All Interlocks and Locking devices are only supplied factory fitted, the associated locks and cables are Field mountable.

Unelec Equipment
www.unelec-equipment.com
Tel: +1 319 244 84 69 UeeS Co. Tel: +1 650 466 86 39
Info@unelec-equipment.com

Power Circuit Breakers
Part of a total solution

Using world class design and development tools like Six Sigma, computer simulation and Lean Manufacturing, the EntelliGuard™ is intended to meet and exceed the most stringent quality and safety standards.
At GE we are proud to offer a product that will offer years of reliable and dependable protection.

GE's name is synonymous with a broad range of products designed to meet our customer's changing and competitive environment. Our drive to exceed our customer's expectations is the foundation for continual renewal of our commitment to provide innovative low voltage solutions.

The new EntelliGuard™ and the existing Elfa Plus, Record Plus and Surion breaker and starter lines offer a full line of **high-performance** protection devices.
They provide a fully co-ordinated approach to circuit and device protection for use in the Domestic, Commercial and Industrial environment.

GE's new lines meet the latest technical standards and regulations and have been certified by authorities as Lovag, the KEMA and Lloyd's.
The components in these lines have been designed to be an integral part of a solution. A complete low voltage distribution and control range including components, accessories and the distribution and controls equipment they fit into.

Unelec Equipment
www.unelec-equipment.com
Tel: +1 319 244 84 69 UeeS Co. Tel: +1 650 466 86 39
Info@unelec-equipment.com

EN 60947-2 standard

Power Circuit Breaker type		GT04		GG04					GT07		GG07				
Air Circuit Breaker denomination		R	K	S	N	H	E	M	R	K	S	N	H	E	M
Poles	Number of	3, 4							3, 4						
Rated insulation voltage	Ui (Volts)	1000				1250	1000	1250	1000				1250	1000	1250
Rated impulse withstand voltage	Uimp (Kilovolt)	12							12						
Rated operational voltage Ue	Volts AC	690				1000	690	1000	690				1000	690	1000
	Volts DC					1000		1000					1000		1000
Category of use		B							B						
Suitable for use as an isolator	Positive ON & OFF	YES							YES						
Rated current In	A at 50°C	400							630						
Ultimate breaking capacity Icu (kA)	230/240V-440V AC	50	65	50	65	85	85	100	65	65	50	65	85	85	100
	500V AC	50	50	50	65	65	85	100	50	50	50	65	65	85	100
	690V AC	42	42	40	50	65	85	85	42	42	40	50	65	85	85
	1000V AC [4]					35		50					35		50
Service breaking capacity Ics (kA)	230/240V-440V AC	50	50	50	65	85	85	100	50	50	50	65	85	85	100
	500V AC	50	50	50	65	65	85	100	50	50	50	65	65	85	100
	690V AC	42	40	40	50	65	85	85	42	42	40	50	65	85	85
	1000V AC [4]					35		50					35		50
Short-circuit withstand Icw (kA)	1 second	42	50	50	65	65	85	85	42	50	50	65	65	85	85
	3 seconds	30	40	30	50	50	50	50	30	40	30	50	50	50	50
Short-circuit Making current Icm 220-500V AC	kA Peak	105	105[5]	105	143	187	187	220	105	105	105	143	187	187	220
Short-circuit Making current Icm 690V AC	kA Peak	88.2	88.2	88.2	105	143	187	187	88.2	88.2	88.2	105	143	187	187
Mechanical endurance (CO operations at 440V AC)	With Maintenance	20000					20000	10000	20000					20000	10000
	Without Maintenance	12500					10000	5000	12500					10000	5000
Electrical endurance (CO operations at 440V AC)	Without Maintenance	6000	10000	6000	10000			5000	6000	10000	6000	10000			5000
Ultimate breaking capacity Icu (kA) = Service breaking capacity Ics (kA) DC L/R = 15ms (nr. of poles in series) [1]	250V DC 1 pole[1]					50		65					50		65
	500V DC 2 poles[1]					35		50					35		50
	750V DC 3 poles[1]					20		35					20		35
	1000V DC 3 poles[1]					20		30					20		30
Single phase breaking capacity I_{IT} (kA)	230/240-500V AC		30			32.5		50		30			32.5		50
	690V AC		24			32.5		50		24			32.5		50

Electronic Trip Units [1]

GT -E type with Ammeter	LT & ST, - GF	X	X
GT -S type with Ammeter, optional communication	LT, ST, I or HI - GF	X	X
GT -N type with Measurement, optional communication	LT, ST, I or HI, RELT GF, ZSI	X	X
GT -H type with Measurement & Relaying, optional communication	LT or LT+, ST, I or HI, RELT GFsum or GFct., ZSI	X	X

EN 60947-3 standard

Power Circuit Breaker type		G704	GJ04			G707	GJ07	
		Non Auto				Non Auto		
Isolator denomination		R	S	N	M		S	M
Poles	Number of	3, 4	3, 4	3, 4	3, 4		3, 4	3, 4
Rated insulation voltage	Ui (Volts)	1000	1000	1000	1250		1000	1250
Rated impulse withstand voltage	Uimp (Kilovolt)	12	12	12	12		12	12
Rated operational voltage Ue	Volts AC	690	690	690	1000		690	1000
	Volts DC				750			750
Category of use		B	B	B	B		B	B
Suitable for use as a isolator	Positive ON & OFF	YES	YES	YES	YES		YES	YES
Rated current In	A at 50°C	400	400	400	400		630	630
Short-circuit withstand Icw (kA)	1 second	42	50	65	85		50	85
	3 seconds	30	40	50	50		40	50
Short-circuit Making current Icm 220-500V AC	kA Peak	75	88.2	143	187		88.2	187
Mechanical endurance (CO operations at 440V AC)	With Maintenance	20000	20000	20000	20000		20000	20000
	Without Maintenance	12500	12500	12500	10000		12500	10000
Electrical endurance (CO operations at 440V AC)	Without Maintenance	6000	10000	10000	10000		10000	10000

Installation

Fixed pattern											
Dimensions in mm	Height	442	442	442	442	442	442	442	442	442	442
	Width 3 pole	258	258	342	342	432	258	258	342	342	432
	Width 4 pole	328	328	442	442	562	328	328	442	442	562
	Depth [2]	328	328	328	328	328	328	328	328	328	328
Available connection modes	Rear Horizontal	X	X	X	X	X	X	X	X	X	X
	Rear Vertical	X	X	X	X	X	X	X	X	X	X
	Front	X	X	X	X	X	X	X	X	X	X
Weights in Kg	3 pole	32	43	32	43	53	32	43	32	43	53
	4 pole	39	54	39	54	68	39	54	39	54	68
Draw-out pattern											
Dimensions in mm	Height	444	444	444	444	444	444	444	444	444	444
	Width 3 pole	250	250	343	343	443	250	250	343	343	443
	Width 4 pole	320	320	443	443	573	320	320	443	443	573
	Depth [2]	453	453	453	453	453	453	453	453	453	453
Available connection modes	Rear Universal [3]	X	X	X	X	X	X	X	X	X	X
	Front	X	X	X	X	X	X	X	X	X	X
Weights in Kg	3 pole	55	82	55	82	131	55	82	55	82	131
	4 pole	66	100	66	100	164	66	100	66	100	164

(1) For dc applications a special trip unit is required
(2) With horizontal rear connections; indicated depth value is the required panel dimension
(3) T stubs can be rotated and used for both vertical & horizontal rear connection
(4) For use at 1000V phase seperators are required
(5) Making capacity is 143kA peak at voltages ≤ 440V AC

	GT08		GG08					GT10		GG10					GT13		GG13				
	R	K	S	N	H	E	M	R	K	S	N	H	E	M	R	K	S	N	H	E	M
	3, 4							3, 4							3, 4						
	1000				1250	1000	1250	1000				1250	1000	1250	1000				1250	1000	1250
	12							12							12						
	690				1000	690	1000	690				1000	690	1000	690				1000	690	1000
					1000		1000					1000		1000					1000		1000
	B							B							B						
	YES							YES							YES						
	800							1000							1250						
	50	65	50	65	85	85	100	50	65	50	65	85	85	100	65	65	50	65	85	85	100
	50	50	50	65	65	85	100	50	50	50	65	65	85	100	50	50	50	65	65	85	100
	42	42	40	50	65	85	85	42	42	40	50	65	85	85	42	42	40	50	65	85	85
					35		50					35		50					35		50
	50	50	50	65	85	85	100	50	50	50	65	85	85	100	50	50	50	65	85	85	100
	50	50	50	65	65	85	100	50	50	50	65	65	85	100	50	50	50	65	65	85	100
	42	42	40	50	65	85	85	42	42	40	50	65	85	85	42	42	40	50	65	85	85
					35		50					35		50					35		50
	42	50	50	65	65	85	85	42	50	50	65	65	85	85	42	50	50	65	65	85	85
	30	40	30	50	50	50	50	30	40	30	50	50	50	50	30	40	30	50	50	50	50
	105	105[5]	105	143	187	187	220	105	105[5]	105	143	187	187	220	105	105[5]	105	143	187	187	220
	88.2	88.2	88.2	105	143	187	187	88.2	88.2	88.2	105	143	187	187	88.2	88.2	88.2	105	143	187	187
		20000				20000	10000			20000			20000	10000			20000			20000	10000
		12500				10000	5000			12500			10000	5000			12500			10000	5000
	6000	10000	6000	10000			5000	6000	10000	6000	10000			5000	6000	10000	6000	10000			5000
					50		65					50		65					50		65
					35		50					35		50					35		50
					20		35					20		35					20		35
					20		30					20		30					20		30
		30			32.5		50		30			32.5		50		30			32.5		50
		24			32.5		50		24			32.5		50		24			32.5		50

	X	X	X
	X	X	X
	X	X	X
	X	X	X

	G708	GJ08				G710	GJ10				G713	GJ13			
	Non Auto					Non Auto					Non Auto				
	R	S	N	M		R	S	N	M		R	S	N	M	
	3, 4	3, 4	3, 4	3, 4		3, 4	3, 4	3, 4	3, 4		3, 4	3, 4	3, 4	3, 4	
	1000	1000	1000	1250		1000	1000	1000	1250		1000	1000	1000	1250	
	12	12	12	12		12	12	12	12		12	12	12	12	
	690	690	690	1000		690	690	690	1000		690	690	690	1000	
				750					750					750	
	B	B	B	B		B	B	B	B		B	B	B	B	
	YES	YES	YES	YES		YES	YES	YES	YES		YES	YES	YES	YES	
	800	800	800	800		1000	1000	1000	1000		1250	1250	1250	1250	
	42	50	65	85		42	50	65	85		42	50	65	85	
	30	40	50	50		30	40	50	50		30	40	50	50	
	75	88.2	143	187		75	88.2	143	187		75	88.2	143	187	
	20000	20000	20000	20000		20000	20000	20000	20000		20000	20000	20000	20000	
	12500	12500	12500	10000		12500	12500	12500	10000		12500	12500	12500	10000	
	6000	10000	10000	10000		6000	10000	10000	10000		10000	10000	10000	10000	

	442	442	442	442	442	442	442	442	442	442	442	442	442	442	442
	258	258	342	342	432	258	258	342	342	432	258	258	342	342	432
	328	328	442	442	562	328	328	442	442	562	328	328	442	442	562
	328	328	328	328	328	328	328	328	328	328	328	328	328	328	328
	X	X	X	X	X	X	X	X	X	X	X	X	X	X	X
	X	X	X	X	X	X	X	X	X	X	X	X	X	X	X
	X	X	X	X	X	X	X	X	X	X	X	X	X	X	X
	32	43	32	43	53	32	43	32	43	53	32	43	32	43	53
	39	54	39	54	68	39	54	39	54	68	39	54	39	54	68
	444	444	444	444	444	444	444	444	444	444	444	444	444	444	444
	250	250	343	343	443	250	250	343	343	443	250	250	343	343	443
	320	320	443	443	573	320	320	443	443	573	320	320	443	443	573
	453	453	453	453	453	453	453	453	453	453	453	453	453	453	453
	X	X	X	X	X	X	X	X	X	X	X	X	X	X	X
	X	X	X	X	X	X	X	X	X	X	X	X	X	X	X
	55	82	55	82	131	55	82	55	82	131	55	82	55	82	131
	66	100	66	100	164	66	100	66	100	164	66	100	66	100	164

Unelec Equipment
www.unelec-equipment.com
Tel: +1 319 244 84 69 UeeS Co. Tel: +1 650 466 86 39
Info@unelec-equipment.com

EN 60947-2 standard

Power Circuit Breaker type		GT16		GG16					GG20				
Air Circuit Breaker denomination		R	K	S	N	H	E	M	S	N	H	E	M
Poles	Number of	3, 4							3, 4				
Rated insulation voltage	Ui (Volts)	1000				1250	1000	1250	1000		1250	1000	1250
Rated impulse withstand voltage	Uimp (Kilovolt)	12							12				
Rated operational voltage Ue	Volts AC	690				1000	690	1000	690		1000	690	1000
	Volts DC					1000		1000			1000		1000
Category of use		B							B				
Suitable for use as an isolator	Positive ON & OFF	YES							YES				
Rated current In	A at 50°C	1600							2000				
Ultimate breaking capacity Icu (kA)	230/240V-440V AC	50	65	50	65	85	85	100	50	65	85	85	100
	500V AC	50	50	50	65	65	85	100	50	65	65	85	100
	690V AC	42	42	40	50	65	85	85	40	50	65	85	85
	1000V AC (4)					35		50			35		50
Service breaking capacity Ics (kA)	230/240V-440V AC	50	50	50	65	85	85	100	50	65	85	85	100
	500V AC	50	50	50	65	65	85	100	50	65	65	85	100
	690V AC	42	42	40	50	65	85	85	40	50	65	85	85
	1000V AC (4)					35		50			35		50
Short-circuit withstand Icw (kA)	1 second	42	50	42	65	65	85	85	50	65	65	85	85
	3 seconds	30	40	30	50	50	50	50	40	50	50	50	50
Short-circuit Making current Icm 220-500V AC	kA Peak	105	105	105	143	187	187	220	105	143	187	187	220
Short-circuit Making current Icm 690V AC	kA Peak	88.2	88.2	88.2	105	143	187	187	84	105	143	187	187
Mechanical endurance (CO operations at 440V AC)	With Maintenance	20000					20000	10000	20000			20000	10000
	Without Maintenance	12500					10000	5000	12500			10000	5000
Electrical endurance (CO operations at 440V AC)	Without Maintenance	6000	10000	6000	10000			5000	8000			6000	5000
Ultimate breaking capacity Icu (kA) = Service breaking capacity Ics (kA) DC L/R = 15ms (nr. of poles in series) (1)	250V DC 1 pole(1)					50		65			50		65
	500V DC 2 poles(1)					35		50			35		50
	750V DC 3 poles(1)					20		35			20		35
	1000V DC 3 poles(1)					20		30			20		30
Single phase breaking capacity I_{IT} (kA)	230/240-500V AC		30			32.5		50			32.5		50
	690V AC		24			32.5		50			32.5		50

Electronic Trip Units (1)

GT -E type with Ammeter	LT & ST, - GF		X	X	
GT -S type with Ammeter, optional communication	LT, ST, I or HI - GF		X	X	
GT -N type with Measurement, optional communication	LT, ST, I or HI, RELT GF, ZSI		X	X	
GT -H type with Measurement & Relaying, optional communication	LT or LT+, ST, I or HI, RELT GFsum or GFct., ZSI		X	X	

EN 60947-3 standard

Power Circuit Breaker type		G716	GJ16				GJ20			
			Non Auto				Non Auto			
Isolator denomination		R	S	N		M	S	N		M
Poles	Number of	3, 4	3, 4	3, 4		3, 4	3, 4			3, 4
Rated insulation voltage	Ui (Volts)	1000	1000	1000		1250	1000	1000		1250
Rated impulse withstand voltage	Uimp (Kilovolt)	12	12	12		12	12			12
Rated operational voltage Ue	Volts AC	690	690	690		1000	690	690		1000
	Volts DC					750				750
Category of use		B	B	B		B	B			B
Suitable for use as a isolator	Positive ON & OFF	YES	YES	YES		YES	YES			YES
Rated current In	A at 50°C	1600	1600	1600		1600	2000			2000
Short-circuit withstand Icw (kA)	1 second	42	50	65		85	50	65		85
	3 seconds	30	40	50		50	40	50		50
Short-circuit Making current Icm 220-500V AC	kA Peak	75	88.2	143		187	88.2	143		187
Mechanical endurance (CO operations at 440V AC)	With Maintenance	20000	20000	20000		20000	20000			10000
	Without Maintenance	12500	12500	12500		10000	12500			5000
Electrical endurance (CO operations at 440V AC)	Without Maintenance	6000	10000	10000		10000	8000			5000

Installation

Fixed pattern								
Dimensions in mm	Height	442	442	442	442	442	442	442
	Width 3 pole	258	258	342	342	432	342	432
	Width 4 pole	328	328	442	442	562	442	562
	Depth (2)	328	328	328	328	328	328	328
Available connection modes	Rear Horizontal	X	X	X	X	X	X	X
	Rear Vertical	X	X	X	X	X	X	X
	Front	X	X	X	X	X	X	X
Weights in Kg	3 pole	32	43	32	43	53	43	53
	4 pole	39	54	39	54	68	54	68
Draw-out pattern								
Dimensions in mm	Height	444	444	444	444	444	444	444
	Width 3 pole	250	250	342	343	443	343	443
	Width 4 pole	320	320	443	443	573	443	573
	Depth (2)	453	453	453	453	453	453	453
Available connection modes	Rear Universal (3)	X	X	X	X	X	X	X
	Front	X	X	X	X	X	X	X
Weights in Kg	3 pole	55	82	55	82	131	82	131
	4 pole	66	100	66	100	164	100	164

(1) For DC applications a special trip unit is required
(2) With indicated depth value is the required panel dimension (breaker dimension indicated with horizontal rear connections)
(3) T stubs can be rotated and used for both vertical and horizontal rear connection
(4) For use at 1000V phase seperators are required
(5) Making capacity is 143kA peak at voltages ≤ 440V AC
(6) GH and GK types ("Limited De-rating types") are only available in draw-out pattern in vertical connection mode draw-out pattern in vertical connection mode
(7) T stubs can only be used for vertical rear connections

	GG25			GG32 and GH32[6]					GG40 and GH40[6]					GG50		GG64	
	N	H	M	N	H	M	G	L	N	H	M	G	L	M	L	M	L
	3, 4			3, 4					3, 4					3, 4		3, 4	
	1000		1250	1000		1250	1000	1250	1000		1250	1000	1250	1000	1250	1000	1250
	12			12					12					12		12	
	690		1000	690		1000	690	1000	690		1000	690	1000	690	1000	690	1000
			1000			1000		750			1000		750		750		750
	B			B					B					B		B	
	YES			YES					YES					YES		YES	
	2500			3200					4000					5000		6400	
	65	85	100	65	85	100	100	150	65	85	100	100	150	100	150	100	150
	65	85	100	65	85	100	100	130	65	85	100	100	130	100	130	100	130
	50	85	85	50	85	85	100	100	50	85	85	100	100	100	100	100	100
			50			50		80			50		80		80		80
	65	85	100	65	85	100	100	150	65	85	100	100	150	100	150	100	150
	65	85	100	65	85	100	100	130	65	85	100	100	130	100	130	100	130
	50	85	85	50	85	85	100	100	50	85	85	100	100	100	100	100	100
			50			50		80			50		80		80		80
	65	85	85	65	85	85	100	100	65	85	85	100	100	100	100	100	100
	50	50	50	50	50	50	85	85	50	50	50	85	85	85	85	85	85
	143	187	220	143	187	220	220	330	143	187	220	220	330	220	330	220	330
	105	187	187	105	187	187	220	220	105	187	187	220	220	220	220	220	220
	20000		10000	20000		10000	10000	10000	20000		10000	10000	10000	10000	10000	10000	10000
	10000		5000	10000		5000	5000	5000	10000		5000	5000	5000	5000	5000	5000	5000
	6000		5000	5000		5000	2500	2500	5000		5000	2500	2500	1500	1500	1500	1500
			50			65		65			65		65		65		65
			35			50		50			50		50		50		50
			20			35		35			35		35		35		35
			30			30		30			30		30		30		30
			50			50		65			50		65		65		65
			50			50		65			50		65		65		65
	X			X					X					X		X	
	X			X					X					X		X	
	X			X					X					X		X	
	X			X					X					X		X	

	GJ25			GJ32 and GK32[6]					GJ40 and GK40[6]					GJ50		GJ64	
	Non Auto			Non Auto					Non Auto					Non Auto		Non Auto	
	N		M	N		M			N		M				L		L
	3, 4		3, 4	3, 4		3, 4			3, 4		3, 4				3, 4		3, 4
	1000		1250	1000		1250			1000		1250				1250		1250
	12		12	12		12			12		12				12		12
	690		1000	690		1000			690		1000				1000		1000
			750			750					750				750		750
	B		B	B		B			B		B				B		B
	YES		YES	YES		YES			YES		YES				YES		YES
	2500		2500	3200		3200			4000		4000				5000		6400
	65		85	65		85			65		85				100		100
	50		50	50		50			50		50				85		85
	143		187	143		187			143		187				220		220
	20000		10000	20000		10000			20000		10000				10000		10000
	10000		5000	10000		5000			10000		5000				5000		5000
	6000		5000	5000		5000			5000		5000				1500		1500
	442			442			442		442			442	442	442		442	
	432			432			737		432			737	737	737		737	
	562			562			967		562			967	967	967		967	
	328			328			328		328			328	328	328		328	
	X			X			X						X	X			
	X			X			X		X			X	X	X		X	
	X			X					X								
	53			53			90		53			90	90	90		90	
	68			68			115		68			115	115	115		115	
	444			444			444		444			444	444	444		444	
	443			443			743		443			743	743	743		743	
	573			573			973		573			973	973	973		973	
	453			453			488		488			488	488	488		488	
	X			X			X		X[7]			X	X	X		X[7]	
	X			X					X								
	131			131			220		131			220	220	220		220	
	164			164			275		164			275	275	275		275	

Unelec Equipment
www.unelec-equipment.com
Tel: +1 319 244 84 69 UeeS Co. Tel: +1 650 466 86 39
Info@unelec-equipment.com

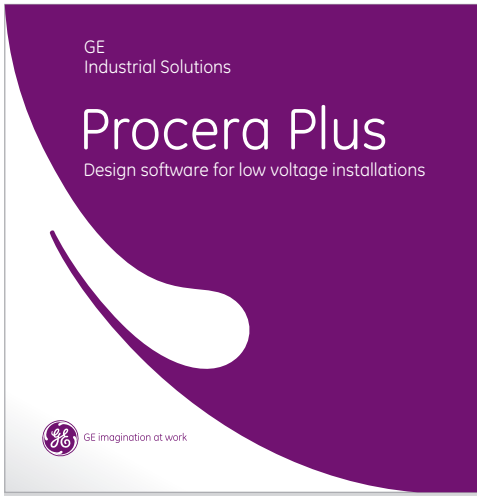

Application Software

The new HD 384[1] and R064-03 standards require that the design of a low voltage distribution system includes the determination of all prospective short-circuit and fault currents levels.

GE has developed a windows based software package to do this 'Procera Plus': A multi-standard and multi-lingual software package to accompany our new product line.

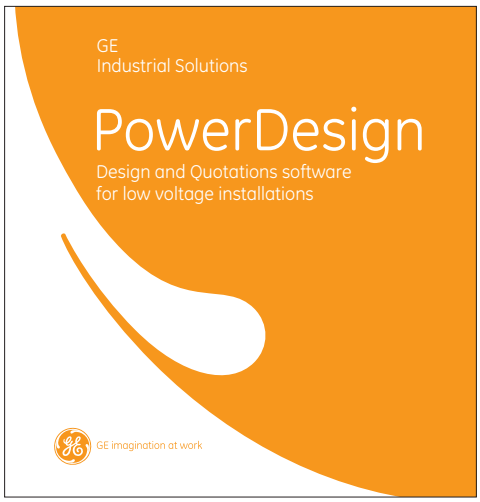

Design Software

GE provides a software package PowerDesign to configure the widely used & well known GE system enclosure ranges 'QuiXtra 630', 'QuiXtra 4000' and 'SEN Plus', and to use them with components as Electrical Distribution panels.

The software provides the user with a varied and simple range of user friendly tools and features to design and configure devices and enclosures following an electrical component mounting logic.

The PowerDesign package also includes a tool that allows the user to configure the new EntelliGuard™ Power Circuit Breaker, its catalogue code and defines the subcomponents of which it is built.

Request the NEW global configurator from your local GE representative. This new web based user-friendly tool allows users to easily configure and price any EntelliGuard breaker or group of breakers. It can be accessed via tablet or PC, and includes live updates.

(1) Also available in IEC 60364 version

Unelec Equipment
www.unelec-equipment.com
Tel: +1 319 244 84 69 UeeS Co. Tel: +1 650 466 86 39
Info@unelec-equipment.com

Power Circuit Breakers

A.2 EntelliGuard™: How to order in 8 steps
A.4 Basic breakers executed in a fixed mounting pattern
A.6 Isolators or Non Automatic Breakers in a fixed mounting pattern
A.7 Termination sets for Breakers & Isolators in fixed mounting pattern
A.9 Basic breakers: Draw-out Breakers; Moving Portion only
A.12 Isolators or Non Automatic Breakers: Draw-out patterns; Moving Portion only
A.14 Cassettes for use with Breakers & Isolators in Draw-out pattern; Factory mounted
A.15 Trip Units; Factory mounted

Internal accessories

A.22 Factory mounted
A.24 Field mountable
A.27 Installation Accessories
A.28 Sensors for Trip Units
A.29 Cassettes for use with Breakers & Isolators in Draw-out pattern; Field mountable
A.30 Field Mounted (spare) Trip Units
A.32 Spare Parts

Global Catalogue number structure

A.34 Breaker
A.38 Cassette

Valid Catalogue number combinations

A.39 Factory mounted: Available standard Breaker & Cassette types
A.40 Factory mounted: Available standard Breaker, Cassette and Trip Unit types
A.41 Factory mounted: Available standard Isolator & Cassette types
A.42 Accessories; Factory and Field mountable
A.44 Accessories, Sensors, Cassettes, Trip Units ans Spares

How to order

Step 1	Step 2				Step 3				Step 4
Choose Current rating	Choose required Interruption Rating				Define if a Breaker or Isolator is needed Proceed to establish the first 5 digits of the Catalogue Number as indicated here				Select the required product A - Breaker or Isolator *In Fixed pattern* B - Breaker or Isolator *As Draw-out, Moving Portion* C - Cassette for Draw-out *Breaker or Isolator*
In	Icu	Ics	Icw	Envelope	Standard		Limited Derating		
	≤ 440V AC				Breaker	Isolator[1]	Breaker	Isolator[1]	
400A	50kA	50kA	42kA	T	GT04R	G704R			Defines the 6th digit In catalogue number
	65kA	50kA	50kA	T	GT04K				
	50kA	50kA	50kA	1	GG04S	GJ04S			
	65kA	65kA	65kA	1	GG04N	GW04N			
	85kA	85kA	65kA	1	GG04H				
	85kA	85kA	85kA	2	GG04E	GW04M			
	100kA	100kA	85kA	2	GG04M				
630A	50kA	50kA	42kA	T	GT07R	G707R			4 = Breaker / Isolator In Fixed pattern 3 pole
	65kA	50kA	50kA	T	GT07K				
	50kA	50kA	50kA	1	GG07S	GJ07S			
	65kA	65kA	65kA	1	GG07N	GW07N			
	85kA	85kA	65kA	1	GG07H				
	85kA	85kA	85kA	2	GG07E	GW07M			
	100kA	100kA	85kA	2	GG07M				
800A	50kA	50kA	42kA	T	GT08R	G708R			6 = Breaker / Isolator In Fixed pattern 4 pole[2]
	65kA	50kA	50kA	T	GT08K				
	50kA	50kA	50kA	1	GG08S	GJ08S			
	65kA	65kA	65kA	1	GG08N	GW08N			
	85kA	85kA	65kA	1	GG08H				
	85kA	85kA	85kA	2	GG08E	GW08M			
	100kA	100kA	85kA	2	GG08M				
1000A	50kA	50kA	42kA	T	GT010R	G710R			
	65kA	50kA	50kA	T	GT010K				
	50kA	50kA	50kA	1	GG10S	GJ10S			
	65kA	65kA	65kA	1	GG10N	GW10N			
	85kA	85kA	65kA	1	GG10H				
	85kA	85kA	85kA	2	GG10E	GW10M			
	100kA	100kA	85kA	2	GG10M				
1250A	50kA	50kA	42kA	T	GT013R	G713R			1 = Breaker / Isolator Moving Portion Only 3 pole
	65kA	50kA	50kA	T	GT013K				
	50kA	50kA	50kA	1	GG13S	GJ13S			
	65kA	65kA	65kA	1	GG13N	GW13N			
	85kA	85kA	65kA	1	GG13H				
	85kA	85kA	85kA	2	GG13E	GW13M			
	100kA	100kA	85kA	2	GG13M				
1600A	50kA	50kA	42kA	T	GT016R	G716R			3 = Breaker / Isolator Moving Portion Only 4 pole[2]
	65kA	50kA	50kA	T	GT016K				
	50kA	50kA	50kA	1	GG16S	GJ16S			
	65kA	65kA	65kA	1	GG16N	GW16N			
	85kA	85kA	65kA	1	GG16H				
	85kA	85kA	85kA	2	GG16E	GJ16M			
	100kA	100kA	85kA	2	GG16M				
2000A	50kA	50kA	50kA	1	GG20S	GJ20S			2 = Cassette for draw-out pattern = Fixed Portion Only 3 pole
	65kA	65kA	65kA	1	GG20N	GW20N			
	85kA	85kA	65kA	1	GG20H				
	85kA	85kA	85kA	2	GG20E	GW20M			
	100kA	100kA	85kA	2	GG20M				
2500A	65kA	65kA	65kA	2	GG25N	GJ25N			5 = Cassette for draw-out pattern = Fixed Portion Only 4 pole[2]
	85kA	85kA	85kA	2	GG25H	GW25M			
	100kA	100kA	85kA	2	GG25M				
3200A	65kA	65kA	65kA	2	GG32N	GJ32N	GH32N	GK32N	
	85kA	85kA	85kA	2	GG32H	GW32M	GH32H	GZ32H	
	100kA	100kA	85kA	2	GG32M		GH32M		
	100kA	100kA	100kA	3	GG32G	GJ32L			
	150kA	150kA	100kA	3	GG32L				
4000A	65kA	65kA	65kA	2	GG40N	GJ40N	GH40N	GK40N	
	85kA	85kA	85kA	2	GG40H	GW40M	GH40H	GZ40H	
	100kA	100kA	85kA	2	GG40M		GH40M		
	100kA	100kA	100kA	3	GG40G	GJ40L			
	150kA	150kA	100kA	3	GG40L				
5000A	100kA	100kA	100kA	3	GG50M	GJ50L			
	150kA	150kA	100kA	3	GG50L				
6400A	100kA	100kA	100kA	3	GG64M	GJ64L			
	150kA	150kA	100kA	3	GG64L				

(1) On Isolators Icu and Ics values do not apply

(2) 4 pole Neutral Left

Examples

Breaker 4p 1600A- Draw-out portion only- Icu=85kA, Ics=Icw=65kA: **GG16H3**

Breaker 3p 3200A Fixed pattern -Horizontal Rear Connections - Icu=Ics=Icw=65kA: **GG32N4**

in 8 steps

Step 5	Step 6	Step 7	Step 8
Finalize the basic Catalogue number see catalogue pages: *A.4-A.5 - Fixed pattern* *A.9-A.11 - Draw-out Portion* *A.7 - Connections Fixed pattern* *A.14 - Cassettes, draw-out*	Basic Catalogue number is a Manually operated device If a Motor Operated device is requested? *Please order Motor and closing coils as Indicated here* (3)	If Universal internal Accessories(3) are needed? Options *UVR or SHT release (s)* *Network Interlocks* *Auxiliary contacts* *Alarm & signal contacts*	Full Catalogue number defines: A Breaker without Trip Unit For all Breakers ADD Trip Unit

completing the basic catalogue number	Add Catalogue number (s)	Add Catalogue number (s)	Add Catalogue number (s)
No addition Indicates Breaker / Isolator In Fixed pattern has set of 3NO/3NC aux. Contacts included Breaker in Fixed pattern Are equipped with Rear Connection (Horizontal) Other options include Rear (Vertical) and Front (Flat) See page A 7 to order Field mountable Adaptation Kits	If chosen device is a breaker or isolator Envelope T		
See pages A.4, 5 & 6	See page A.22 Order a Motor Type T and 1 Closing Coil or 1 Command closing coil Based on voltage Requirements and specifications	If chosen device is a Breaker or Isolator See page A.22	If chosen device is a Breaker See pages A.15 to A.19 Choose and Add a Trip Unit out of the the four basic types and 39 different options.
	If chosen device is a Breaker or Isolator Envelope 1	To add up to 3 SHT or UVR Releases Or 1 Network Interlock Coils and 1 SHT or UVR Release	Offering
No addition Indicates Breaker / Isolator Moving Portion Only has set of 3NO/3NC aux. Contacts included	See page A.22 Order a Motor Type1 and 1 Closing Coil or 1 Command closing coil Based on voltage Requirements and specifications	If chosen device is a Breaker or Isolator See page A.22	An Extremely Large setting range covering Overload, Delayed and Instantaneous Short-circuit Protection
See pages A.9, 10 & 11	If chosen device is a Breaker or Isolator Envelope 2 or 3	To extend on the installed 3 NO + 3NC contacts Maximum of 8 possible	Groundfault Protection in Single or Dual mode suited for applications as UEF, REF & SEF or combinations thereof
U = Cassette with Universal 'T stabs' suited for use as Horizontal or Vertical rear connections Safety Shutters Supplied with Cassette (3)	See page A.22 Order a Motor type 2 and 1 Closing Coil or 1 Command closing coil Based on voltage Requirements and specifications	If chosen device is a Breaker or Isolator See page A.22	Complete and sophisticated Network measurement options, Including Wave Form Capture
V = Cassette with Vertical Rear Connections Safety Shutters Supplied with Cassette (3)		To add Bell Alarm and/or Coils signalling contacts	Multiple relaying options as Zone Selective Interlock, Undervoltage, Overvoltage, Reverse Power etc.
F = Cassette with Front Flat connections Safety Shutters Supplied with Cassette (3)		If chosen device is a Cassette See page A.22 & A.23	
See page A.14		To Add Position indication Contacts in Cassette Or provisions for key interlocks	

- Or -

A 2nd ordering method can be used in which the fully configured breaker or cassette is defined in one character string. This string comprises 18 digits when used for the breaker and 12 for when used for the cassette.
This global ordering code is referred to within GE as the:
Catalogue Number
It is used on all relevant ordering documents and printed on each EntelliGuard™ breaker front facia. An explanation of this code and its use can be found on page A.32 of this catalogue.

*When ordering with the method indicated here our CRC department will define and confirm the mentioned individual **Catalogue Number**.*

(3) *Devices ordered here are supplied factory fitted*

Remark: For Field Mountable Accessories see page A.24 to A.31

Basic breakers executed in a fixed mounting pattern

- With Horizontal Rear Connection (for other options, please refer to page A.7)[1]
- With Aux. contact block equipped with 3 NO and 3 NC contacts
- Basic Breaker MUST be equipped with a Trip Unit (for options, please refer to page A.15 to A.19)
- For 1000V applications (M and L types) phase seperators are required (see page A.27)

Fixed mounting pattern

			3 pole		4 pole[2]	
		Rating (A)	Cat. No.	Ref. No.	Cat. No.	Ref. No.
	R type Icu = Ics = 50kA Icw = 42kA	400	GT04R4	**444542**	GT04R6	**444563**
		630	GT07R4	**444543**	GT07R6	**444564**
		800	GT08R4	**444544**	GT08R6	**444565**
		1000	GT10R4	**444545**	GT10R6	**444566**
		1250	GT13R4	**444546**	GT13R6	**444567**
		1600	GT16R4	**444547**	GT16R6	**444568**
	S type Icu = Ics = Icw 50kA	400	GG04S4	**407019**	GG04S6	**407020**
		630	GG07S4	**407048**	GG07S6	**407049**
		800	GG08S4	**407078**	GG08S6	**407079**
		1000	GG10S4	**407108**	GG10S6	**407109**
		1250	GG13S4	**407138**	GG13S6	**407139**
		1600	GG16S4	**407168**	GG16S6	**407169**
		2000	GG20S4	**407208**	GG20S6	**407209**
	K type Icu = 65kA Ics = Icw = 50kA	400	GT04K4	**444548**	GT04K6	**444569**
		630	GT07K4	**444549**	GT07K6	**444570**
		800	GT08K4	**444550**	GT08K6	**444571**
		1000	GT10K4	**444551**	GT10K6	**444572**
		1250	GT13K4	**444552**	GT13K6	**444573**
		1600	GT16K4	**444553**	GT16K6	**444574**
	N type Icu = Ics = Icw 65kA	400	GG04N4	**407015**	GG04N6	**407016**
		630	GG07N4	**407044**	GG07N6	**407045**
		800	GG08N4	**407074**	GG08N6	**407075**
		1000	GG10N4	**407104**	GG10N6	**407105**
		1250	GG13N4	**407134**	GG13N6	**407135**
		1600	GG16N4	**407164**	GG16N6	**407165**
		2000	GG20N4	**407204**	GG20N6	**407205**
		2500	GG25N4	**407240**	GG25N6	**407241**
		3200	GG32N4	**407266**	GG32N6	**407267**
		4000	GG40N4	**407292**	GG40N6	**407293**
	H type Icu = Ics = 85kA Icw = 65kA	400	GG04H4	**407007**	GG04H6	**407008**
		630	GG07H4	**407036**	GG07H6	**407037**
		800	GG08H4	**407066**	GG08H6	**407067**
		1000	GG10H4	**407096**	GG10H6	**407097**
		1250	GG13H4	**407126**	GG13H6	**407127**
		1600	GG16H4	**407156**	GG16H6	**407157**
		2000	GG20H4	**407196**	GG20H6	**407197**
	E-H type Icu = Ics = Icw 85kA	400	GG04E4	**407003**	GG04E6	**407004**
		630	GG07E4	**407032**	GG07E6	**407033**
		800	GG08E4	**407062**	GG08E6	**407063**
		1000	GG10E4	**407092**	GG10E6	**407093**
		1250	GG13E4	**407122**	GG13E6	**407123**
		1600	GG16E4	**407152**	GG16E6	**407153**
		2000	GG20E4	**407192**	GG20E6	**407193**
		2500	GG25H4	**407232**	GG25H6	**407233**
		3200	GG32H4	**407244**	GG32H6	**407245**
		4000[1]	GG40H4	**407280**	GG40H6	**407281**

Unelec Equipment
www.unelec-equipment.com
Tel: +1 319 244 84 69 UeeS Co. Tel: +1 650 466 86 39
Info@unelec-equipment.com

Basic breakers executed in a fixed mounting pattern

- With Horizontal Rear Connection (for other options, please refer to page A.7)[1]
- With Aux. contact block equipped with 3 NO and 3 NC contacts
- Basic Breaker MUST be equipped with a Trip Unit (for options, please refer to page A.15 to A.19)
- For 1000V applications (M and L types) phase seperators are required (see page A.27)

Fixed mounting pattern

	Rating (A)	3 pole Cat. No.	3 pole Ref. No.	4 pole[2] Cat. No.	4 pole[2] Ref. No.
M type Icu = Ics = 100kA Icw = 85kA	400	GG04M4	**407011**	GG04M6	**407012**
	630	GG07M4	**407040**	GG07M6	**407041**
	800	GG08M4	**407070**	GG08M6	**407071**
	1000	GG10M4	**407100**	GG10M6	**407101**
	1250	GG13M4	**407130**	GG13M6	**407131**
	1600	GG16M4	**407160**	GG16M6	**407161**
	2000	GG20M4	**407200**	GG20M6	**407201**
	2500	GG25M4	**407236**	GG25M6	**407237**
	3200	GG32M4	**407262**	GG32M6	**407263**
	4000[1]	GG40M4	**407288**	GG40M6	**407289**
G-M type Icu = Ics = Icw 100kA	3200	GG32G4	**407252**	GG32G6	**407253**
	4000	GG40G4	**407270**	GG40G6	**407271**
	5000	GG50M4	**407306**	GG50M6	**407307**
	6400	GG64M4	**407326**	GG64M6	**407327**
L type Icu = Ics = 150kA Icw = 100kA	3200	GG32L4	**407254**	GG32L6	**407255**
	4000	GG40L4	**407284**	GG40L6	**407285**
	5000	GG50L4	**407302**	GG50L6	**407303**
	6400	GG64L4	**407322**	GG64L6	**407323**

(1) Rear Vertical Connection for Indicated 4000A types
(2) 4th pole on Left, Trip Unit Field Configurable at 0.50 or 100% of phase rating

Unelec Equipment
www.unelec-equipment.com
Tel: +1 319 244 84 69 UeeS Co. Tel: +1 650 466 86 39
Info@unelec-equipment.com

Isolators or Non Automatic breakers executed in a fixed mounting pattern

- With Horizontal Rear Connection (for other options, please refer to page A.7)[1]
- With Aux. contact block equipped with 3 NO and 3 NC contacts
- For 1000V applications (M and L types) phase seperators are required (see page A.27)

Fixed mounting pattern

	Rating (A)	3 pole Cat. No.	3 pole Ref. No.	4 pole Cat. No.	4 pole Ref. No.
R type Non Automatic Icw 42kA	400	G704R4	**444616**	G704R6	**444632**
	630	G707R4	**444617**	G707R6	**444633**
	800	G708R4	**444618**	G708R6	**444634**
	1000	G710R4	**444619**	G710R6	**444635**
	1250	G713R4	**444620**	G713R6	**444636**
	1600	G716R4	**444621**	G716R6	**444637**

S type Non Automatic Icw 50kA	400	GJ04S4	**407380**	GJ04S6	**407381**
	630	GJ07S4	**407400**	GJ07S6	**407401**
	800	GJ08S4	**407420**	GJ08S6	**407421**
	1000	GJ10S4	**407440**	GJ10S6	**407441**
	1250	GJ13S4	**407460**	GJ13S6	**407461**
	1600	GJ16S4	**407480**	GJ16S6	**407481**
	2000	GJ20S4	**407500**	GJ20S6	**407501**

N type Non Automatic Icw 65kA	400	GW04N4	**407376**	GW04N6	**407377**
	630	GW07N4	**407396**	GW07N6	**407397**
	800	GW08N4	**407416**	GW08N6	**407417**
	1000	GW10N4	**407436**	GW10N6	**407437**
	1250	GW13N4	**407456**	GW13N6	**407457**
	1600	GW16N4	**407476**	GW16N6	**407477**
	2000	GW20N4	**407496**	GW20N6	**407497**
	2500	GJ25N4	**407520**	GJ25N6	**407521**
	3200	GJ32N4	**407539**	GJ32N6	**407540**
	4000[1]	GJ40N4	**407560**	GJ40N6	**407561**

M type Non Automatic Icw 85kA	400	GW04M4	**408350**	GW04M6	**408351**
	630	GW07M4	**408352**	GW07M6	**408353**
	800	GW08M4	**408354**	GW08M6	**408355**
	1000	GW10M4	**408356**	GW10M6	**408357**
	1250	GW13M4	**408358**	GW13M6	**408359**
	1600	GW16M4	**408360**	GW16M6	**408361**
	2000	GW20M4	**408362**	GW20M6	**408363**
	2500	GW25M4	**408364**	GW25M6	**408365**
	3200	GW32M4	**408366**	GW32M6	**408367**
	4000[1]	GW40M4	**408368**	GW40M6	**408369**

L type Non Automatic Icw 100kA	3200	GJ32L4	**407535**	GJ32L6	**407536**
	4000	GJ40L4	**407556**	GJ40L6	**407557**
	5000	GJ50L4	**407567**	GJ50L6	**407568**
	6400	GJ64L4	**407577**	GJ64L6	**407578**

(1) Rear Vertical Connection for Indicated 4000A types

Unelec Equipment
www.unelec-equipment.com
Tel: +1 319 244 84 69 UeeS Co. Tel: +1 650 466 86 39
Info@unelec-equipment.com

Termination sets for Breakers & Isolators in Fixed pattern

- To modify Standard connection (Horizontal Rear) to:
- Vertical Rear
- Front flat connection
- Sets containing terminals and hardware for the line & load side of the breaker

Termination sets for Breakers & Isolators in Fixed pattern

Vertical Rear Connections

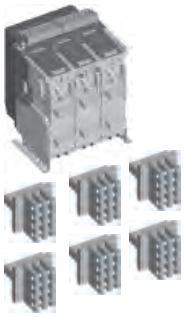

Rating (A)	Suited for use with EntelliGuard™ types	3 pole [1] Cat. No.	3 pole [1] Ref. No.	4 pole [1] Cat. No.	4 pole [1] Ref. No.
Terminations for envelope T					
400 - 1600A	GT type R & K and G7 type R	GT16H4RVI	**444626**	GT16H6RVI	**444628**
Terminations for envelope 1					
400 - 1600A	GG, GJ & GW type S, N & H	G16H4RVI	**408058**	G16H6RVI	**408082**
2000A	GG, GJ & GW type S, N & H	G20H4RVI	**408059**	G20H6RVI	**408083**
Terminations for envelope 2					
400 - 3200A[2]	GG, GJ & GW type E, N, H & M	G32M4RVI	**408070**	G32M6RVI	**408071**
4000A[3]	GG, GJ & GW type N, H & M	G40M4RVI	**408072**	G40M6RVI	**408074**
Terminations for envelope 3					
3200 - 6400A	GG & GJ type G, M & L	G64L4RVI	**408073**	G64L6RVI	**408075**

Front access Connections

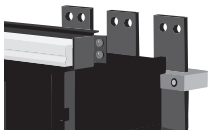

Terminations for envelope T					
400 - 1600A	GT type R & K and G7 type R	GT16H4FFI	**444625**	GT16H6FFI	**444627**
Terminations for envelope 1					
400 - 1600A	GG, GJ & GW type S, N & H	G16H4FFI	**408060**	G16H6FFI	**408062**
2000A	GG, GJ & GW type S, N & H	G20H4FFI	**408061**	G20H6FFI	**408063**
Terminations for envelope 2					
400 - 3200A	GG, GJ & GW type E, N, H & M	G32M4FFI	**408066**	G32M6FFI	**408068**
4000A	GG, GJ & GW type N, H & M	G40M4FFI	**408067**	G40M6FFI	**408069**

Wall mounting Brackets[4]

Wall Mounting Brackets for Env. 1 & 2		GFMTG	**408085**	GFMTG	**408085**

(1) Sets are made up of 6pcs for 3pole and 8pcs for 4pole.
(2) For 400-2500A an alternative type is available in a set of 3 Cat. G25M3RVI **Ref. 408076**
(3) Normally supplied with the standard 4000A breaker
(4) Recommended for use with front access connections.

Unelec Equipment
www.unelec-equipment.com
Tel: +1 319 244 84 69 UeeS Co. Tel: +1 650 466 86 39
Info@unelec-equipment.com

Notes

Basic breakers in a Draw-out pattern

- With Aux. contact block equipped with 3 NO and 3 NC contacts
- Basic Breaker MUST be equipped with a Trip Unit (please refer to page A.15 to A.19 for options)
- A cassette is needed, please refer to page A.14 for options
- For 1000V applications (M and L types) phase seperators are required (see page A.27)

Draw-out pattern; moving portion only

			3 pole		4 pole[1]	
		Rating (A)	Cat. No.	Ref. No.	Cat. No.	Ref. No.
	R type Icu = Ics= 50kA Icw = 42kA	400	GT04R1	**444500**	GT04R3	**444520**
		630	GT07R1	**444501**	GT07R3	**444521**
		800	GT08R1	**444502**	GT08R3	**444522**
		1000	GT10R1	**444503**	GT10R3	**444523**
		1250	GT13R1	**444504**	GT13R3	**444524**
		1600	GT16R1	**444505**	GT16R3	**444525**
	S type Icu = Ics = Icw 50kA	400	GG04S1	**407017**	GG04S3	**407018**
		630	GG07S1	**407046**	GG07S3	**407047**
		800	GG08S1	**407076**	GG08S3	**407077**
		1000	GG10S1	**407106**	GG10S3	**407107**
		1250	GG13S1	**407136**	GG13S3	**407137**
		1600	GG16S1	**407166**	GG16S3	**407167**
		2000	GG20S1	**407206**	GG20S3	**407207**
	K type Icu = 65kA Ics = Icw = 50kA	400	GT04K1	**444506**	GT04K3	**444526**
		630	GT07K1	**444507**	GT07K3	**444527**
		800	GT08K1	**444508**	GT08K3	**444528**
		1000	GT10K1	**444509**	GT10K3	**444529**
		1250	GT13K1	**444510**	GT13K3	**444530**
		1600	GT16K1	**444511**	GT16K3	**444531**
	N type Icu = Ics = Icw 65kA	400	GG04N1	**407013**	GG04N3	**407014**
		630	GG07N1	**407042**	GG07N3	**407043**
		800	GG08N1	**407072**	GG08N3	**407073**
		1000	GG10N1	**407102**	GG10N3	**407103**
		1250	GG13N1	**407132**	GG13N3	**407133**
		1600	GG16N1	**407162**	GG16N3	**407163**
		2000	GG20N1	**407202**	GG20N3	**407203**
		2500	GG25N1	**407238**	GG25N3	**407239**
		3200	GG32N1	**407264**	GG32N3	**407265**
		4000	GG40N1	**407290**	GG40N3	**407291**
	H type Icu = Ics = 85kA Icw = 65kA	400	GG04H1	**407005**	GG04H3	**407006**
		630	GG07H1	**407034**	GG07H3	**407035**
		800	GG08H1	**407064**	GG08H3	**407065**
		1000	GG10H1	**407094**	GG10H3	**407095**
		1250	GG13H1	**407124**	GG13H3	**407125**
		1600	GG16H1	**407154**	GG16H3	**407155**
		2000	GG20H1	**407194**	GG20H3	**407195**
	E-H type Icu = Ics = Icw 85kA	400	GG04E1	**407001**	GG04E3	**407002**
		630	GG07E1	**407030**	GG07E3	**407031**
		800	GG08E1	**407060**	GG08E3	**407061**
		1000	GG10E1	**407090**	GG10E3	**407091**
		1250	GG13E1	**407120**	GG13E3	**407121**
		1600	GG16E1	**407150**	GG16E3	**407151**
		2000	GG20E1	**407190**	GG20E3	**407191**
		2500	GG25H1	**407230**	GG25H3	**407231**
		3200	GG32H1	**407242**	GG32H3	**407273**
		4000	GG40H1	**407278**	GG40H3	**407279**

Unelec Equipment
www.unelec-equipment.com
Tel: +1 319 244 84 69 UeeS Co. Tel: +1 650 466 86 39
Info@unelec-equipment.com

Basic breakers in a Draw-out pattern

- With Aux. contact block equipped with 3 NO and 3 NC contacts
- Basic Breaker MUST be equipped with a Trip Unit (please refer to page A.15 to A.19 for options)
- A cassette is needed, please refer to page A.14 for options
- For 1000V applications (M and L types) phase seperators are required (see page A.27)

Draw-out pattern; moving portion only

		3 pole		4 pole[1]	
M type Icu = Ics = 100kA Icw = 85kA	400	GG04M1	**407009**	GG04M3	**407010**
	630	GG07M1	**407038**	GG07M3	**407039**
	800	GG08M1	**407068**	GG08M3	**407069**
	1000	GG10M1	**407098**	GG10M3	**407099**
	1250	GG13M1	**407128**	GG13M3	**407129**
	1600	GG16M1	**407158**	GG16M3	**407159**
	2000	GG20M1	**407198**	GG20M3	**407199**
	2500	GG25M1	**407234**	GG25M3	**407235**
	3200	GG32M1	**407260**	GGM3M3	**407261**
	4000	GG40M1	**407286**	GG40M3	**407287**
G-M type Icu = Ics = Icw 100kA	3200	GG32G1	**407250**	GG32G3	**407251**
	4000	GG40G1	**407268**	GG40G3	**407269**
	5000	GG50M1	**407304**	GG50M3	**407305**
	6400	GG64M1	**407324**	GG64M3	**407325**
L type Icu = Ics = 150kA Icw = 100kA	3200	GG32L1	**407248**	GG32L3	**407249**
	4000	GG40L1	**407282**	GG40L3	**407283**
	5000	GG50L1	**407300**	GG50L3	**407301**
	6400	GG64L1	**407320**	GG64L3	**407321**

(1) 4th pole on Left, Trip Unit Fie

Unelec Equipment
www.unelec-equipment.com
Tel: +1 319 244 84 69 UeeS Co. Tel: +1 650 466 86 39
Info@unelec-equipment.com

Unelec Equipment
www.unelec-equipment.com
Tel: +1 319 244 84 69 UeeS Co. Tel: +1 650 466 86 39
Info@unelec-equipment.com

Draw-out Breakers: "Limited Derating types"

- Draw-out Breaker with no or very limited de-rating when used enclosed
- With Aux. contact block equipped with 3 NO and 3 NC contacts
- Basic Breaker MUST be equipped with a Trip Unit (please refer to page A.15 to A.19 for options)
- A cassette with vertical clusters is needed, please refer to page A.14 for options

Draw-out Breakers pattern: moving portion only

		3 pole		4 pole[1]	
	Rating (A)	Cat. No.	Ref. No.	Cat. No.	Ref. No.
N type Icu = Ics = Icw 65kA (Envelope 2 only)	3200	GH32N1	**407350**	GH32N3	**407351**
	4000	GH40N1	**407356**	GH40N3	**407357**
H type Icu = Ics = Icw 85kA (Envelope 2 only)	3200	GH32H1	**407346**	GH32H3	**407347**
	4000	GH40H1	**407352**	GH40H3	**407353**
M type Icu = Ics = 100kA Icw = 85kA (Envelope 2 only)	3200	GH32M1	**407348**	GH32M3	**407349**
	4000	GH40M1	**407354**	GH40M3	**407355**

(1) 4th pole on Left, Trip Unit Configurable at 0.50 or 100% of phase rating

Unelec Equipment
www.unelec-equipment.com
Tel: +1 319 244 84 69 UeeS Co. Tel: +1 650 466 86 39
Info@unelec-equipment.com

Isolators or Non Automatic Breakers in a Draw-out pattern

- With Aux. contact block equipped with 3 NO and 3 NC contacts
- A cassette is needed, please refer to page A.14 for options
- For 1000V applications (M and L types) phase seperators are required (see page A.25)

Draw-out pattern; moving portion only

		3 pole		4 pole[1]	
Rating (A)	Cat. No.	Ref. No.	Cat. No.	Ref. No.
R type Non Automatic Icw 42kA				
400	G704R1	**444585**	G704R3	**444600**
630	G707R1	**444586**	G707R3	**444601**
800	G708R1	**444587**	G708R3	**444602**
1000	G710R1	**444588**	G710R3	**444603**
1250	G713R1	**444589**	G713R3	**444604**
1600	G716R1	**444590**	G716R3	**444605**
S type Non Automatic Icw 50kA				
400	GJ04S1	**407378**	GJ04S3	**407379**
630	GJ07S1	**407398**	GJ07S3	**407399**
800	GJ08S1	**407418**	GJ08S3	**407419**
1000	GJ10S1	**407438**	GJ10S3	**407439**
1250	GJ13S1	**407458**	GJ13S3	**407459**
1600	GJ16S1	**407478**	GJ16S3	**407479**
2000	GJ20S1	**407498**	GJ20S3	**407499**
N type Non Automatic Icw 65kA				
400	GW04N1	**407374**	GW04N3	**407375**
630	GW07N1	**407394**	GW07N3	**407395**
800	GW08N1	**407414**	GW08N3	**407415**
1000	GW10N1	**407434**	GW10N3	**407435**
1250	GW13N1	**407454**	GW13N3	**407455**
1600	GW16N1	**407474**	GW16N3	**407475**
2000	GW20N1	**407494**	GW20N3	**407495**
2500	GJ25N1	**407518**	GJ25N3	**407519**
3200	GJ32N1	**407537**	GJ32N3	**407538**
4000	GJ40N1	**407558**	GJ40N3	**407559**
M type Non Automatic Icw 85kA				
400	GW04M1	**408400**	GW04M3	**408401**
630	GW07M1	**408402**	GW07M3	**408403**
800	GW08M1	**408404**	GW08M3	**408405**
1000	GW10M1	**408406**	GW10M3	**408407**
1250	GW13M1	**408408**	GW13M3	**408409**
1600	GW16M1	**408410**	GW16M3	**408411**
2000	GW20M1	**408412**	GW20M3	**408413**
2500	GW25M1	**408414**	GW25M3	**408415**
3200	GW32M1	**408416**	GW32M3	**408417**
4000	GW40M1	**408418**	GW40M3	**408419**
L type Non Automatic Icw 100kA				
3200	GJ32L1	**407533**	GJ32L3	**407534**
4000	GJ40L1	**407554**	GJ40L3	**407555**
5000	GJ50L1	**407565**	GJ50L3	**407566**
6400	GJ64L1	**407575**	GJ64L3	**407576**

Unelec Equipment
www.unelec-equipment.com
Tel: +1 319 244 84 69 UeeS Co. Tel: +1 650 466 86 39
Info@unelec-equipment.com

Isolators or Non Automatic Breakers in a Draw-out pattern: "Limited Derating types"

- Draw-out patterns with no or very limited de-rating when used enclosed
- With Aux. contact block equipped with 3 NO and 3 NC contacts
- A cassette with vertical clusters is needed, please refer to page A.14 for options

Draw-out pattern, vertical clusters; moving portion only

			3 pole		4 pole	
	Rating (A)	Cat. No.	Ref. No.	Cat. No.	Ref. No.
N type Non Automatic Icw 65kA	3200	GK32N1	**407591**	GK32N3	**407592**
	4000	GK40N1	**407595**	GK40N3	**407596**
H type Non Automatic Icw 85kA	3200	GZ32H1	**407589**	GZ32H3	**407590**
	4000	GZ40H1	**407593**	GZ40H3	**407594**

Envelope 2 only

Unelec Equipment
www.unelec-equipment.com
Tel: +1 319 244 84 69 UeeS Co. Tel: +1 650 466 86 39
Info@unelec-equipment.com

Cassettes for use with Breakers & Isolators in Draw-out pattern; Factory mounted

- References apply for Cassettes supplied in one Packaging with Breakers or Isolators (for Separate Cassettes see page A.27)
- With Connection modes as indicated in left column
- Each cassette is supplied with safety shutters

Cassettes for Draw-out pattern; fixed portion only

Universal Rear Connections

Rating (A)	Suited for use with EntelliGuard™ -G types	3 pole Cat. No.	3 pole Ref. No.	4 pole Cat. No.	4 pole Ref. No.
Cassette for envelope T					
400 - 1600A	GT, G7 type R & K G7	GT16K2UM	**444691**	GT16K5UM	**444694**
Cassette for envelope 1					
400 - 1600A	GG, GJ & GW type S	GG16S2UM	**407616**	GG16S5UM	**407618**
1600A	GG, GJ & GW type S & H	GG16H2UM	**408202**	GG16H5UM	**408205**
2000A	GG, GJ & GW type S, N & H	GG20H2UM	**408212**	GG20H5UM	**408215**
Cassette for envelope 2					
400 - 2000A	GG, GJ & GW type N, E & M	GG20M2UM	**408224**	GG20M5UM	**408227**
2500A	GG, GJ & GW type N, H & M	GG25M2UM	**408236**	GG25M5UM	**408239**
3200A	GG, GJ & GW type N, H & M(1)	GG32M2UM	**408247**	GG32M5UM	**408251**
4000A	GG, GJ & GW type N, H & M(1)	GG40M2UM	**408259**	GG40M5UM	**408263**
Remark: Each cassette is supplied with connection pads that can be rotated and used for Vertical or Horizontal connections.					
Cassette for envelope 3 (2)					
3200 - 6400A(3)	GG & GJ type G, M & L	GG64L2UM	**408281**	GG64L5UM	**408283**

Horizontal rear Connections

Cassette for envelope T					
400 - 1600A	GT, G7 type R & K G7	GT16K2HM	**444692**	GT16K5HM	**444695**

Vertical rear Connections

Cassette with dual vertical clusters and connection pads for limited de-rating envelope 2					
3200A	GH, GK, GJ & GZ type N.H & M	GH32M2VM	**408292**	GH32M5VM	**408293**
4000A	GH, GK, GJ & GZ type N.H & M(1)	GH40M2VM	**408294**	GH40M5VM	**408295**

Front access Connections

Cassette for envelope T					
400 - 1600A	GT, G7 type R & K G7	GT16K2FM	**444690**	GT16K5FM	**444693**
Cassette for envelope 1					
400 - 1600A	GG, GJ & GW type S	GG16S2FM	**407626**	GG16S5FM	**407628**
1600A	GG, GJ & GW type S & H	GG16H2FM	**408200**	GG16H5FM	**408203**
2000A	GG, GJ & GW type S, N & H	GG20H2FM	**408210**	GG20H5FM	**408213**
Cassette for envelope 2					
400 - 2000A	GG, GJ & GW type E, N, H & M	GG20M2FM	**408222**	GG20M5FM	**408225**
2500A	GG, GJ & GW type N, H & M	GG25M2FM	**408234**	GG25M5FM	**408237**
3200A	GG, GJ & GW type N, H & M	GG32M2FM	**408245**	GG32M5FM	**408249**
4000A	GG, GJ & GW type N, H & M	GG40M2FM	**408257**	GG40M5FM	**408261**

(1) Cassettes for envelope 2 are limited to a current of **3200A when connected in horizontal mode.** Connected in vertical mode a 4000A rating is achieved
(2) The Cassette for envelope 3 is limited to a current of **5000A when connected in horizontal mode** Connected in vertical mode it has a rating of 6400A. This cassette type is NOT depicted here
(3) 4th pole on Left

Unelec Equipment
www.unelec-equipment.com
Tel: +1 319 244 84 69 UeeS Co. Tel: +1 650 466 86 39
Info@unelec-equipment.com

Trip Units - Factory mounted

GT- E	Basic functionality	Designation	Extended functionality	Cat. No.	Ref. No.
	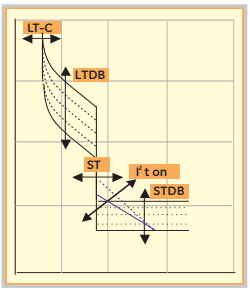	**GT-E Trip Unit with:** LT-C 0.2-1 x In = Ir LTDB ST I²T ON or OFF STDB	None	GTG00K1-SF	**408800**
		GT-Rating Plug	Required for all types	GTPUNI	**408860**
	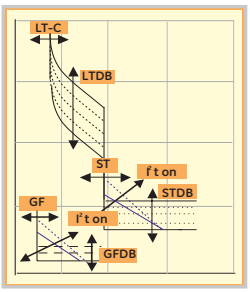	**GT-E Trip Unit with:** LT-C 0.2 -1 x In = Ir LTDB ST I²T ON or OFF STDB GF I²T ON or OFF GFDB	None	GTG00K2-SF	**408801**
		GT-Rating Plug	Required for all types	GTPUNI	**408860**
GT- S					
	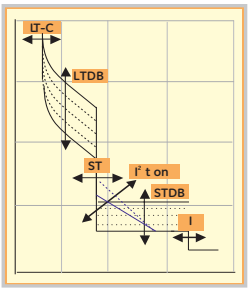	**GT-S Trip Unit with:** LT-C 0.2 -1 x In = Ir LTDB ST I²T ON or OFF STDB I	None	GTG00K9-SF	**408803**
		GT-Rating Plug	Required for all types	GTPUNI	**408860**
	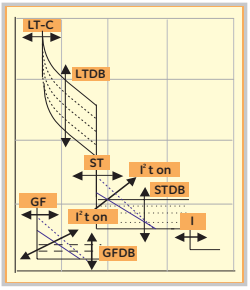	**GT-S Trip Unit with:** LT-C 0.2 -1 x In = Ir LTDB ST I²T ON or OFF STDB GF I²T ON or OFF GFDB I	None	GTG00K3-SF	**408805**
			+ Modbus Communication	GTG00K3-2SF	**408807**
		GT-Rating Plug	Required for all types	GTPUNI	**408860**
	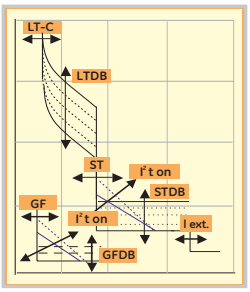	**GT-S Trip Unit with:** LT-C 0.2 -1 x In = Ir LTDB ST I²T ON or OFF STDB GF I²T ON or OFF GFDB I ext.	None	GTG00K4-SF	**408806**
			+ Modbus Communication	GTG00K4-2SF	**408808**
		GT-Rating Plug	Required for all types	GTPUNI	**408860**

Unelec Equipment
www.unelec-equipment.com
Tel: +1 319 244 84 69 UeeS Co. Tel: +1 650 466 86 39
Info@unelec-equipment.com

Trip Units - Factory mounted

GT- N

Basic functionality

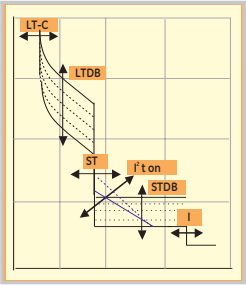

Extended functionality

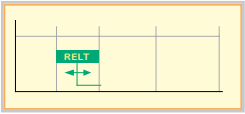

Designation	Extended functionality	Cat. No.	Ref. No.
GT-N Trip Unit with:	Measurement unit [1]	GTG00K9-4SF	**408813**
LT-C 0.2 -1 x In = Ir	RELT Instantaneous		
LTDB			
ST I²T ON or OFF			
STDB			
I			
RELT			
GT-Rating Plug	Required for all types	GTPUNI	**408860**

Basic functionality

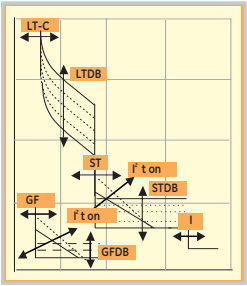

Extended functionality

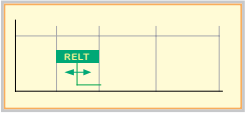

Designation	Extended functionality	Cat. No.	Ref. No.
GT-N Trip Unit with:	Measurement unit [1]	GTG00K3-4SF	**408815**
LT-C 0.2 -1 x In = Ir	RELT Instantaneous		
LTDB			
ST I²T ON or OFF	+ Modbus Communication	GTG00K3T6SF	**408817**
STDB	+ Zone Selective Interlock		
GF I²T ON or OFF	on I, ST & GF functions		
GFDB			
I			
RELT			
GT-Rating Plug	Required for all types	GTPUNI	**408860**

Basic functionality

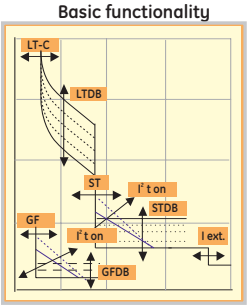

Extended functionality

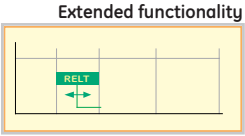

Designation	Extended functionality	Cat. No.	Ref. No.
GT-N Trip Unit with:	Measurement unit [1]	GTG00K4-4SF	**408816**
LT-C 0.2 -1 x In = Ir	RELT Instantaneous		
LTDB	+ Modbus Communication	GTG00K4T6SF	**408818**
ST I²T ON or OFF	+ Zone Selective Interlock		
STDB	on I, ST & GF functions		
GF I²T ON or OFF			
GFDB			
I ext.			
RELT			
GT-Rating Plug	Required for all types	GTPUNI	**408860**

(1) An auxiliary Power Conditioner is obligatory when a fully functioning measurement is required see page A.26

Unelec Equipment
www.unelec-equipment.com
Tel: +1 319 244 84 69 UeeS Co. Tel: +1 650 466 86 39
Info@unelec-equipment.com

Trip Units - Factory mounted

GT- H

Remark:
The GT-H type offers five overload (LT) band choices:

1) **LTC** (Bimetal equivelant shape)
2) **LTF** (Fuse equivelant shape)
3) **I** (inverse shape)
4) **VI** (Very inverse shape)
5) **XI** (extremly Inverse shape)

Basic functionality

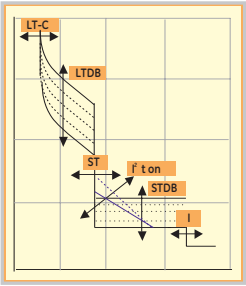

Extended functionality

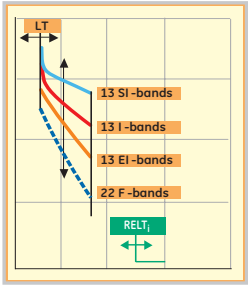

Basic functionality

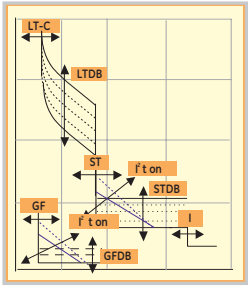

Extended functionality

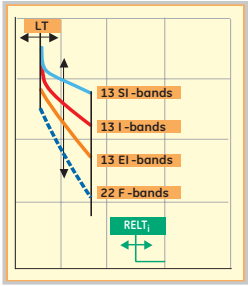

Designation	Extended functionality	Cat. No.	Ref. No.
GT-H Trip Unit with:	A choice of FIVE LT band shapes	GTG00N9-5SF	**408823**
LT0.2 - 1 x In = Ir	Measurement Unit[1]		
LTDB	Data aquisition & Relay functionality		
ST I²T ON or OFF	RELT Instantaneous		
STDB			
I	A choice of FIVE LT band shapes	GTG00N9-8SF	**408863**
RELT	Measurement Unit[1]		
LT, ST, I and GF functions	Data aquisition & Relay functionality		
can be switched ON or OFF	RELT Instantaneous		
	Modbus Communication		
	A choice of FIVE LT band shapes	GTG00N9-9SF	**408865**
	Measurement Unit[1]		
	Data aquisition & Relay functionality		
	RELT Instantaneous		
	Profibus Communication		
GT-Rating Plug	Required for all types	GTPUNI	**408860**
GT-H Trip Unit with:	A choice of FIVE LT band shapes	GTG00N5-5SF	**408825**
LT0.2 - 1 x In =Ir	Dual GF Protection (Res./Sum or CT)		
LTDB	Measurement Unit[1]		
ST I²T ON or OFF	Data aquisition & Relay functionality		
STDB	RELT Instantaneous		
GF with I²T ON or OFF			
GFDB	A choice of FIVE LT band shapes	GTG00N5-8SF	**408833**
I_i	Dual GF Protection (Res./Sum or CT)		
RELT	Measurement Unit[1]		
LT, ST, I and GF functions	Data aquisition & Relay functionality		
can be switched ON or OFF	RELT Instantaneous		
	Modbus Communication		
	A choice of FIVE LT band shapes	GTG00N5-9SF	**408841**
	Dual GF Protection (Res./Sum or CT)		
	Measurement Unit[1]		
	Data aquisition & Relay functionality		
	RELT Instantaneous		
	Profibus Communication		
	A choice of FIVE LT band shapes	GTG00N5T5SF	**408829**
	Dual GF Protection (Res./Sum or CT)		
	Zone Selective Interlock on ST, I & GF		
	Measurement Unit[1]		
	Data aquisition & Relay functionality		
	RELT Instantaneous		
	A choice of FIVE LT band shapes	GTG00N5T8SF	**408837**
	Dual GF Protection (Res./Sum or CT)		
	Zone Selective Interlock on ST, I & GF		
	Measurement Unit[1]		
	Data aquisition & Relay functionality		
	RELT Instantaneous		
	Modbus Communication		
	A choice of FIVE LT band shapes	GTG00N5T9SF	**408845**
	Dual GF Protection (Res./Sum or CT)		
	Zone Selective Interlock on ST, I & GF		
	Measurement Unit[1]		
	Data aquisition & Relay functionality		
	RELT Instantaneous		
	Profibus Communication		
GT-Rating Plug	Required for all types	GTPUNI	**408860**

(1) An auxiliary Power Conditioner is obligatory when a fully functioning measurement is required see page A.26

Unelec Equipment
www.unelec-equipment.com
Tel: +1 319 244 84 69 UeeS Co. Tel: +1 650 466 86 39
Info@unelec-equipment.com

Trip Units - Factory mounted

GT- H

Remark:
The GT-H type offers five overload (LT) band choices:

1) **LTC** (Bimetal equivelant shape)
2) **LTF** (Fuse equivelant shape)
3) **I** (inverse shape)
4) **VI** (Very inverse shape)
5) **XI** (extremly Inverse shape)

Basic functionality

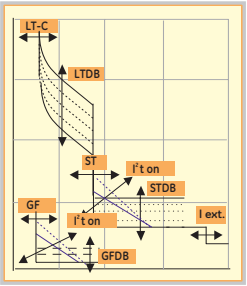

Extended functionality

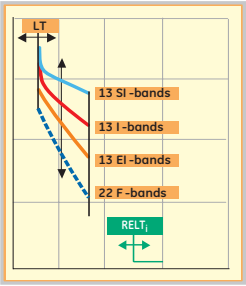

Designation	Extended functionality	Cat. No.	Ref. No.
GT-H Trip Unit with:	A choice of FIVE LT band shapes	GTG00N7-5SF	**408827**
LT0.2 - 1 x In =Ir	Dual GF Protection (Res./Sum or CT)		
LTDB	Measurement Unit[1]		
ST I²T ON or OFF	Data aquisition & Relay functionality		
STDB	RELT Instantaneous		
GF sum. I²T ON or OFF			
GF CT with I²T ON or OFF	A choice of FIVE LT band shapes	GTG00N7-8SF	**408835**
GFDB	Dual GF Protection (Res./Sum or CT)		
I ext.	Measurement Unit[1]		
RELT	Data aquisition & Relay functionality		
LT, ST, I and GF functions	RELT Instantaneous		
can be switched ON or OFF	Modbus Communication		
	A choice of FIVE LT band shapes	GTG00N7-9SF	**408843**
	Dual GF Protection (Res./Sum or CT)		
	Measurement Unit[1]		
	Data aquisition & Relay functionality		
	RELT Instantaneous		
	Profibus Communication		
	A choice of FIVE LT band shapes	GTG00N7T5SF	**408831**
	Dual GF Protection (Res./Sum or CT)		
	Zone Selective Interlock on ST, I & GF		
	Measurement Unit[1]		
	Data aquisition & Relay functionality		
	RELT Instantaneous		
	A choice of FIVE LT band shapes	GTG00N7T8SF	**408839**
	Dual GF Protection (Res./Sum or CT)		
	Zone Selective Interlock on ST, I & GF		
	Measurement Unit[1]		
	Data aquisition & Relay functionality		
	RELT Instantaneous		
	Modbus Communication		
	A choice of FIVE LT band shapes	GTG00N7T9SF	**408847**
	Dual GF Protection (Res./Sum or CT)		
	Zone Selective Interlock on ST, I & GF		
	Measurement Unit[1]		
	Data aquisition & Relay functionality		
	RELT Instantaneous		
	Profibus Communication		
GT-Rating Plug	Required for all types	GTPUNI	**408860**

(1) An auxiliary Power Conditioner is obligatory when a fully functioning measurement is required see page A.26

Unelec Equipment
www.unelec-equipment.com
Tel: +1 319 244 84 69 UeeS Co. Tel: +1 650 466 86 39
Info@unelec-equipment.com

Trip Units - Factory mounted

GT- H

Remark:
The GT-H type offers five overload (LT) band choices:

1) **LTC** (Bimetal equivelant shape)
2) **LTF** (Fuse equivelant shape)
3) **I** (inverse shape)
4) **VI** (Very inverse shape)
5) **XI** (extremly Inverse shape)

Basic functionality

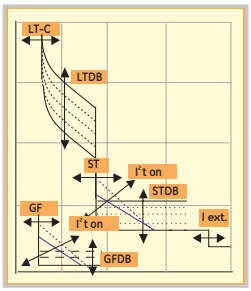

Extended functionality

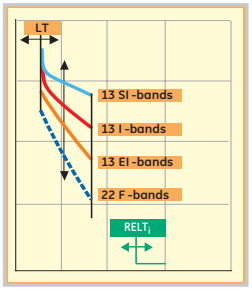

Designation	Extended functionality	Cat. No.	Ref. No.
GT-H Trip Unit with:	A choice of FIVE LT band shapes	GTG00N6-5SF	**408826**
LT0.2 - 1 x In =Ir	Dual GF Protection (Res./Sum or CT)		
LTDB	Measurement Unit[1]		
ST I²T ON or OFF	Data aquisition & Relay functionality		
STDB	RELT Instantaneous		
GF sum with I²T ON or OFF	With standard Instaneous		
GF CT with I²T ON or OFF	*Idem with Extended Instananeous*	GTG00N8-5SF	**408828**
GFDB			
I or I ext.	A choice of FIVE LT band shapes	GTG00N6-8SF	**408834**
RELT	Dual GF Protection (Res./Sum or CT)		
LT, ST, I and GF functions	Measurement Unit[1]		
can be switched ON or OFF	Data aquisition & Relay functionality		
	RELT Instantaneous		
	Modbus Communication		
	With standard Instaneous		
	Idem with Extended Instananeous	GTG00N8-8SF	**408836**
	A choice of FIVE LT band shapes	GTG00N6-9SF	**408842**
	Dual GF Protection (Res./Sum or CT)		
	Measurement Unit[1]		
	Data aquisition & Relay functionality		
	RELT Instantaneous		
	Profibus Communication		
	With standard Instaneous		
	Idem with Extended Instananeous	GTG00N8-9SF	**408844**
	A choice of FIVE LT band shapes	GTG00N6T5SF	**408830**
	Dual GF Protection (Res./Sum or CT)		
	Zone Selective Interlock on ST, I & GF		
	Measurement Unit[1]		
	Data aquisition & Relay functionality		
	RELT Instantaneous		
	With standard Instaneous		
	Idem with Extended Instananeous	GTG00N8T5SF	**408832**
	A choice of FIVE LT band shapes	GTG00N6T8SF	**408838**
	Dual GF Protection (Res./Sum or CT)		
	Zone Selective Interlock on ST, I & GF		
	Measurement Unit[1]		
	Data aquisition & Relay functionality		
	RELT Instantaneous		
	Modbus Communication		
	With standard Instaneous		
	Idem with Extended Instananeous	GTG00N8T8SF	**408840**
	A choice of FIVE LT band shapes	GTG00N6T9SF	**408846**
	Dual GF Protection (Res./Sum or CT)		
	Zone Selective Interlock on ST, I & GF		
	Measurement Unit[1]		
	Data aquisition & Relay functionality		
	RELT Instantaneous		
	Profibus Communication		
	With standard Instaneous		
	Idem with Extended Instananeous	GTG00N8T9SF	**408848**
GT-Rating Plug	Required for all types	GTPUNI	**408860**

(1) An auxiliary Power Conditioner is obligatory when a fully functioning measurement is required see page A.26
(2) Does NOT trip the associated EntelliGuard G™ Breaker, BUT produces an Alarm signal

Unelec Equipment
www.unelec-equipment.com
Tel: +1 319 244 84 69 UeeS Co. Tel: +1 650 466 86 39
Info@unelec-equipment.com

Trip Units - Factory mounted

GT- HE

Remark:
The GT-HE type offers five overload (LT) band choices:

1) **LTC** (Bimetal equivelant shape)
2) **LTF** (Fuse equivelant shape)
3) **I** (inverse shape)
4) **VI** (Very inverse shape)
5) **XI** (extremly Inverse shape)

Basic functionality

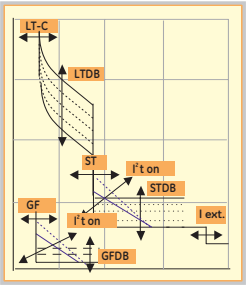

Extended functionality

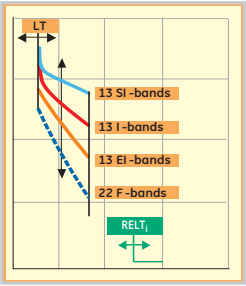

Designation	Extended functionality	Cat. No.	Ref. No.
GT-HE Trip Unit with: LT0.2 - 1 x In = Ir LTDB ST I²T ON or OFF STDB EF-(UEF&SEF) I²T ON or OFF EFDB on UEF & SEF EF-REF (instantaneous only) I or I ext. RELT LT, ST, I and EF functions can be switched ON or OFF. Multiple UEF, REF and SEF combinations possible.	A choice of FIVE LT band shapes FF protection (UEF, SEF & REF) Measurement Unit[1] Data aquisition & Relay functionality RELT Instantaneous With standard Instaneous	GTG00ND-5SF	**408755**
	Idem with Extended Instananeous	GTG00NF-5SF	**408763**
	A choice of FIVE LT band shapes FF protection (UEF, SEF & REF) Measurement Unit[1] Data aquisition & Relay functionality RELT Instantaneous Modbus Communication With standard Instaneous	GTG00ND-8SF	**408756**
	Idem with Extended Instananeous	GTG00NF-8SF	**408764**
	A choice of FIVE LT band shapes FF protection (UEF, SEF & REF) Measurement Unit[1] Data aquisition & Relay functionality RELT Instantaneous Profibus Communication With standard Instaneous	GTG00ND-9SF	**408757**
	Idem with Extended Instananeous	GTG00NF-9SF	**408765**
	LT Band shape Choice (LTC or LTF) Dual GF Protection (Res./Sum or CT) Zone Selective Interlock on ST, I & GF Measurement Unit[1] Data aquisition & Relay functionality RELT Instantaneous With standard Instaneous	GTG00NDT5SF	**408750**
	Idem with Extended Instananeous	GTG00NDT8SF	**408758**
	LT Band shape Choice (LTC or LTF) Dual GF Protection (Res./Sum or CT) Zone Selective Interlock on ST, I & GF Measurement Unit[1] Data aquisition & Relay functionality RELT Instantaneous Modbus Communication With standard Instaneous	GTG00NDT8SF	**408751**
	Idem with Extended Instananeous	GTG00NFT8SF	**408759**
	LT Band shape Choice (LTC or LTF) Dual GF Protection (Res./Sum or CT) Zone Selective Interlock on ST, I & GF Measurement Unit[1] Data aquisition & Relay functionality RELT Instantaneous Profibus Communication With standard Instaneous	GTG00NDT9SF	**408753**
	Idem with Extended Instananeous	GTG00NFT9SF	**408761**
GT-Rating Plug	Required for all types	GTPUNI	**408860**

(1) An auxiliary Power Conditioner is obligatory when a fully functioning measurement is required see page A.26

Unelec Equipment
www.unelec-equipment.com
Tel: +1 319 244 84 69 UeeS Co. Tel: +1 650 466 86 39
Info@unelec-equipment.com

Notes

Internal accessories - Factory mounted

For field mounted variants see page A.24 & A.25

Motor Operators[1]

	Motor Operator Type T		Motor Operator Type 1		Motor Operator Type 2 & 3	
	Cat. No.	Ref. No.	Cat. No.	Ref. No.	Cat. No.	Ref. No.
24V DC	GMT0024D	**444630**	GM01024D	**407700**	GM02024D	**407725**
48V DC	GMT0048D	**444631**	GM01048D	**407702**	GM02048D	**407727**
60V DC	GMT0060D	**444248**	GM01060D	**407704**	GM02060D	**407729**
110-130V DC	GMT0110D	**444249**	GM01110D	**407706**	GM02110D	**407731**
220V DC	GMT0220D	**444251**	GM01220D	**407720**	GM02220D	**407722**
250V DC	GMT0250D	**444252**	GM01250D	**407708**	GM02250D	**407733**
48V AC	GMT0048A	**444247**	GM01048A	**407710**	GM02048A	**407735**
110-130V AC	GMT0120A	**444250**	GM01120A	**407712**	GM02120A	**407737**
220-240V AC	GMT0240A	**444638**	GM01240A	**407714**	GM02240A	**407739**
380-415V AC	GMT0400A	**444639**	GM01400A	**407716**	GM02400A	**407741**
440V AC	GMT0440A	**444640**	GM01440A	**407718**	GM02440A	**407743**

Closing Coils

	Closing Coil				Comm. Closing Coil[2]	
2V DC	GCCN024D	**407861**			GCCC024D	**407836**
48V AC-DC	GCCN048	**407863**			GCCC048	**407838**
60V DC	GCCN060D	**407865**			GCCC060D	**407840**
110-130V AC-DC	GCCN120	**407867**			GCCC120	**407842**
220-240V AC-DC	GCCN240	**407869**			GCCC240	**407844**
277V AC; 250V DC	GCCN277	**407870**			GCCC277	**407849**
380- 415V AC	GCCN400A	**407877**			GCCC400A	**407852**
440V AC	GCCN440A	**407878**			GCCC440A	**407853**

Releases

	Undervoltage		Continously Rated / Shunt		Impulse Rated Shunt[3]	
24V DC	GUVT024D	**407795**	GSTR024D	**407770**	GSST024	**407789**
48V AC-DC	GUVT048	**407797**	GSTR048	**407772**		
60V DC	GUVT060D	**407799**	GSTR060D	**407774**		
110-130V AC-DC	GUVT120	**407801**	GSTR120	**407776**	GSST120	**407791**
220-240V AC-DC	GUVT240	**407803**	GSTR240	**407778**	GSST240	**407793**
277V AC; 250V DC	GUVT277	**407805**	GSTR277	**407780**		
380- 415V AC	GUVT400A	**407807**	GSTR400A	**407782**		
440V AC	GUVT440A	**407809**	GSTR440A	**407784**		

Other Coils

	Remote Reset Coil[4]				Network Interlock[3] [5]	
24V DC	GRRC024D	**407760**				
110V AC-DC	GRRC110	**407762**			GNTK120	**407753**
230V AC-DC	GRRC230	**407764**			GNTK240	**407754**

Auxiliary Contacts

	Auxiliary Contacts Type T		Auxiliary Contacts Type 1/2/3	
Power Rated 3NO & 3NC	Delivered as standard option in all EntelliGuard™ breakers & Isolators			
Power Rated 4NO & 4NC	GTAS4	**444656**		
Power Rated 8NO & 8NC			GAS6	**407887**
Power Rated 3NO & 3NC + signal rated 2NO & 2NC			GAS5	**407886**
Power Rated 4NO & 4NC + signal rated 4NO & 4NC			GAS8	**407888**

Bell Alarm Contacts

	Bell Alarm Type T		Bell Alarm Type 1/2/3	
Power rated 1 changeover	GTBAT1	**444660**	GBAT1	**407891**
Signal rated 1 changeover	GTBATS1	**444661**	GBATS1	**407890**

Indication Contacts 444672

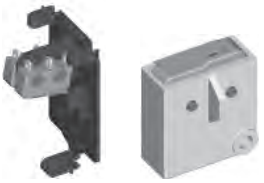

	Power rated wired through sec. Discon.		Signal rated wired through sec. Discon.		Signal rated wired Trip Unit (comm.)	
CC/CCC/UVT/STR Release indicator 1NO	GCSP1	**407895**			GCSP2	**407896**
Breaker Ready to Close indic.[6] 1NO	GRTC1	**407897**	GRTC2	**407899**	GRTC3	**407894**
Breaker Ready to Close indic.[6] 1NC	GRTC4	**407911**	GRTC5	**407912**	GRTC6	**407913**

(1) Motor Spring Charged indication contact supplied with Moto Operator.
(2) The Command Closing Coil is only available in the combination with 3NO and 3NC Auxiliary Contacts for Envelope T.
Optionally the Command Closing Coil can be accessed via the Trip Unit (communication bus).
(3) Must be used with an auxiliary contact.
(4) The Remote Reset Coil is not available in Envelope T, and not available as field mountable accessory for Envelope 1/2/3.
(5) The Network Interlock is not available in Envelope T.
(6) Not available as field mountable accessory.

Unelec Equipment
www.unelec-equipment.com
Tel: +1 319 244 84 69 UeeS Co. Tel: +1 650 466 86 39
Info@unelec-equipment.com

Internal accessories - Factory mounted

For field mounted variants see page A.25

Locking Mechanisms[1]

		Ronis		Castell		Profalux	
		Cat. No.	Ref. No.	Cat. No.	Ref. No.	Cat. No.	Ref. No.
Envelope T	Mounted on Break (Allow 1 lock to be placed)	GTBRON	444666			GTBPRO	444665
	Mounted on Cassette (Allow 1 lock to be placed)	GTCRON	444669			GTCPRO	444668
Envelope 1/2/3	Mounted on Break (The Ronis and Profalux devices allow 1 to 4 Locks to be placed.)	GBRON	407971	GBCAS	407970	GBPRO	407978
	Mounted on Cassette. (2 devices for 2 locks are possible)	GCRON	407976			GCPRO	407980

Operation

	Front Fascia of Breaker						
	Counter; number of Operations	GMCN	408035				

Pre-assembled interlocks for cables[2]

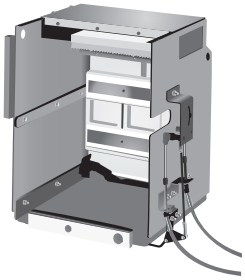

Envelope T[3]

Interlock Scheme				Fixed pattern		Draw-out	
Type	Brk. 1	Brk. 2	Brk. 3	Cat. No.	Ref. No.	Cat. No.	Ref. No.
A	OFF	OFF		For Each Breaker		For Each Breaker	
	ON	OFF		GTI2FAD	444675	GTI2WAD	444676
	OFF	ON					
B	OFF	OFF	OFF	For Each Breaker		For Each Breaker	
	ON	OFF	OFF	GTI3FB	444677	GTI3WB	444678
	OFF	ON	OFF				
	OFF	OFF	ON				
C	OFF	OFF	OFF				
	ON	OFF	OFF				
	OFF	OFF	ON	For Each Breaker		For Each Breaker	
	OFF	ON	OFF	GTI3FC	444679	GTI3WC	444680
	ON	ON	OFF				
	OFF	ON	ON				
	ON	OFF	ON				
D	OFF	OFF	OFF	For Brk.1 & 3		For Brk.1 & 3	
	ON	OFF	OFF	GTI3FDT	444681	GTI3WDT	444682
	OFF	OFF	ON				
	ON	OFF	ON				
	OFF	ON	OFF				

Envelope 1/2/3

Interlock Scheme				Fixed pattern		Draw-out	
Type	Brk. 1	Brk. 2	Brk. 3	Cat. No.	Ref. No.	Cat. No.	Ref. No.
A	OFF	OFF		For Each Breaker		For Each Breaker	
	ON	OFF		GI2FAD	407900	GI2WAD	407901
	OFF	ON					
B	OFF	OFF	OFF	For Each Breaker		For Each Breaker	
	ON	OFF	OFF	GI3FB	407902	GI3WB	407903
	OFF	ON	OFF				
	OFF	OFF	ON				
C	OFF	OFF	OFF				
	ON	OFF	OFF				
	OFF	OFF	ON	For Each Breaker		For Each Breaker	
	OFF	ON	OFF	GI3FC	407904	GI3WC	407905
	ON	ON	OFF				
	OFF	ON	ON				
	ON	OFF	ON				
D	OFF	OFF	OFF	For Brk.1 & 3		For Brk.1 & 3	
	ON	OFF	OFF	GI2FAD	407900	GI2WAD	407901
	OFF	OFF	ON				
	ON	OFF	ON	For Brk. 2		For Brk. 2	
	OFF	ON	OFF	GI3FDT	407906	GI3WDT	407907

(1) For the separately available locks see page A.25, Kirk Lock version available on request
(2) The kits must be ordered complete with a breaker. To allow for installation and transport each kit is supplied as a field mountable unit customized for use with the ordered draw-out breaker cassette or a fixed pattern breaker. For the associated cables see page. A.26
(3) For Envelope T, only the combination in the same envelope size can be interlocked.

Internal accessories - Factory mounted

Maximum amount of installable internal accessories

See page A.25

Unelec Equipment
www.unelec-equipment.com
Tel: +1 319 244 84 69 UeeS Co. Tel: +1 650 466 86 39
Info@unelec-equipment.com

Internal accessories - Field mountable

For factory mounted variants see page A.22 & A.23

Motor Operators[1]

	Motor Operator Type T		Motor Operator Type 1		Motor Operator Type 2 & 3	
	Cat. No.	Ref. No.	Cat. No.	Ref. No.	Cat. No.	Ref. No.
24V DC	GMT0024DR	**444641**	GM01024DR	**407701**	GM02024DR	**407726**
48V DC	GMT0048DR	**444642**	GM01048DR	**407703**	GM02048DR	**407728**
60V DC	GMT0060DR	**444643**	GM01060DR	**407705**	GM02060DR	**407730**
110-130V DC	GMT0110DR	**444644**	GM01110DR	**407707**	GM02110DR	**407732**
220V DC	GMT0220DR	**444645**	GM01220DR	**407721**	GM02220DR	**407723**
250V DC	GMT0250DR	**444646**	GM01250DR	**407709**	GM02250DR	**407734**
48V AC	GMT0048AR	**444647**	GM01048DR	**407711**	GM02048DR	**407736**
110-130V AC	GMT0120AR	**444648**	GM01120DR	**407713**	GM02120DR	**407738**
220-240V AC	GMT0240AR	**444649**	GM01240DR	**407715**	GM02240DR	**407740**
380-415V AC	GMT0400AR	**444650**	GM01400DR	**407717**	GM02400DR	**407742**
440V AC	GMT0440AR	**444651**	GM01440DR	**407719**	GM02440DR	**407744**

Closing Coils

	Closing Coil				Comm. Closing Coil[2]	
2V DC	GCCN024DR	**407860**			GCCC024DR	**407835**
48V AC-DC	GCCN048R	**407862**			GCCC048R	**407837**
60V DC	GCCN060DR	**407864**			GCCC060DR	**407839**
110-130V AC-DC	GCCN120R	**407866**			GCCC120R	**407841**
220-240V AC-DC	GCCN240R	**407868**			GCCC240R	**407843**
277V AC; 250V DC	GCCN277R	**407871**			GCCC277R	**407850**
380- 415V AC	GCCN400AR	**407876**			GCCC400AR	**407851**
440V AC	GCCN440AR	**407879**			GCCC440AR	**407854**

Releases

	Undervoltage		Continously Rated Shunt		Impulse Rated Shunt[3]	
24V DC	GUVT024DR	**407796**	GSTR024D	**407771**	GSST024R	**407790**
48V AC-DC	GUVT048R	**407798**	GSTR048	**407773**		
60V DC	GUVT060DR	**407800**	GSTR060D	**407775**		
110-130V AC-DC	GUVT120R	**407802**	GSTR120	**407777**	GSST120R	**407792**
220-240V AC-DC	GUVT240R	**407804**	GSTR240	**407779**	GSST240R	**407794**
277V AC; 250V DC	GUVT277R	**407806**	GSTR277	**407781**		
380- 415V AC	GUVT400AR	**407808**	GSTR400A	**407783**		
440V AC	GUVT440AR	**407810**	GSTR440A	**407785**		

Auxiliary Contacts

	Auxiliary Contacts Type T		Auxiliary Contacts Type 1/2/3	
Power Rated 3NO & 3NC (Delivered as standard option in all EntelliGuard™ breakers & Isolators)	GTAS3R	**444658**	GAS3R	**407880**
Power Rated 4NO & 4NC	GTAS4R	**444659**		
Power Rated 8NO & 8NC			GAS6R	**407882**
Power Rated 3NO & 3NC + signal rated 2NO & 2NC			GAS5R	**407881**
Power Rated 4NO & 4NC + signal rated 4NO & 4NC			GAS8R	**407883**

Bell Alarm Contacts

	Bell Alarm Type T		Bell Alarm Type 1/2/3	
Power rated 1 changeover	GTBAT1R	**444660**	GBAT1R	**407889**

Indication Contacts

	Power rated wired through sec. Discon.				Signal rated wired Trip Unit (comm.)	
CC/CCC/UVT/STR Release indicator 1NO	GCSP1R	**407915**			GCSP2R	**407916**

Position Indication Contacts Cassette

	Cassette Indication Type T		Cassette Indication Type 1/2/3	
1 Changeover power rated 1NO/1NC	GTCPS1R	**444791**	GCPS1R	**407924**
2Changeover Power rated 2NO/2NC	GTCPS2R	**444793**	GCPS2R	**407925**
2 Changeover Power rated 1NO/1NC & Signal rated 1NO/1NC	GTCPSAR	**444795**	GCPSAR	**407056**

(1) Motor Spring Charged indication contact supplied with Moto Operator.
(2) The Command Closing Coil is only available in the combination with 3NO and 3NC Auxiliary Contacts for Envelope T.
The command closing coil does not come with push-button for EntelliGuard T frame.
Optionally the Command Closing Coil can be accessed via the Trip Unit (communication bus).
(3) Must be used with an auxiliary contact.

Internal accessories - Field mountable

For factory mounted variants see page A.22 & A.23

Locking Mechanisms[1]			Ronis		Castell		Profalux	
			Cat. No.	Ref. No.	Cat. No.	Ref. No.	Cat. No.	Ref. No.
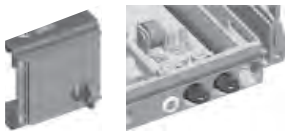	Envelope 1/2/3	Mounted on Breaker The Ronis and Profalux devices allow 1 to 4 Locks to be placed. The Castell device 1	GBRONR	**407968**	GBCASR	**407967**	GBPROR	**407979**
		Mounted on Cassette (2 devices for 2 locks are possible)	GCRONR	**407974**			GCPROR	**407981**
Associated Locks[2]								
		Ronis 1104 B Lock[2]	GRON	**407985**				
		Profalux B204Y Lock[2]					GPRO	**407987**
		Castell FS1 lock/K4 key[2]			GCAS	**407986**		
Operation								
		Front Fascia of Breaker						
		Counter; number of Operations	GMCNR	**408033**				

(1) Kirk Lock version available on request
(2) Not available as Factory Mounted accessory

Internal accessories - Envelope 1, 2 & 3

Maximum amount of installable internal accessories

Motor Operator type 1 or 2	Closing Coil or Command Closing Coil	Undervoltage Release[3]	Shunt Release	Network Interlock Release	Auxiliary Contacts Power NO + NC	Auxiliary Contacts Hi-Fidelity NO+NC	Bell Alarm contacts	Signaling Contacts Releases indic. Power	Signaling Contacts Releases indic. HI.Fid.	Breaker ready to close indication	Breaker Spring Charged indication	Position Indication Contacts (per Pos.)	Earthing Device	Locking Mechanism Breaker	Locking Mechanism Cassette
1	1	2	1	0	8	0	1	0	0	1	0	2	1	1	1
1	1	1	2	0	8	0	1	0	0	1	0	2	1	1	1
1	1	1	0	1	8	0	1	0	0	1	0	2	1	1	1
1	1	0	1	1	8	0	1	0	0	1	0	2	1	1	1
1	1	2	1	0	8	0	1	0	0	0	1	2	1	1	1
1	1	1	2	0	8	0	1	0	0	0	1	2	1	1	1
1	1	1	0	1	8	0	1	0	0	0	1	2	1	1	1
1	1	0	1	1	8	0	1	0	0	0	1	2	1	1	1
1	1	2	1	0	4	4	1	0	0	1	0	2	1	1	1
1	1	1	2	0	4	4	1	0	0	1	0	2	1	1	1
1	1	1	0	1	4	4	1	0	0	1	0	2	1	1	1
1	1	0	1	1	4	4	1	0	0	1	0	2	1	1	1
1	1	2	1	0	4	4	1	0	0	0	1	2	1	1	1
1	1	1	2	0	4	4	1	0	0	0	1	2	1	1	1
1	1	1	0	1	4	4	1	0	0	0	1	2	1	1	1
1	1	0	1	1	4	4	1	0	0	0	1	2	1	1	1
1	1	2	1	0	6	0	1	1	1	1	0	2	1	1	1
1	1	1	2	0	6	0	1	1	1	1	0	2	1	1	1
1	1	1	0	1	6	0	1	1	1	1	0	2	1	1	1
1	1	0	1	1	6	0	1	1	1	1	0	2	1	1	1
1	1	2	1	0	4	0	2	2	0	0	1	2	1	1	1
1	1	1	2	0	4	0	2	2	0	0	1	2	1	1	1
1	1	1	0	1	4	0	2	2	0	0	1	2	1	1	1
1	1	0	1	1	4	0	2	2	0	0	1	2	1	1	1
1	1	2	1	0	3	3	1	1	0	1	0	2	1	1	1
1	1	1	2	0	3	3	1	1	0	1	0	2	1	1	1
1	1	1	0	1	3	3	1	1	0	1	0	2	1	1	1
1	1	0	1	1	3	3	1	1	0	1	0	2	1	1	1
1	1	2	1	0	2	2	2	2	0	0	1	2	1	1	1
1	1	1	2	0	2	2	2	2	0	0	1	2	1	1	1
1	1	1	0	1	2	2	2	2	0	0	1	2	1	1	1
1	1	0	1	1	2	2	2	2	0	0	1	2	1	1	1

(3) TDM module (Time delay module) is mounted externally to the breaker

Internal accessories - Field mountable

Not available in a factory mounted variant

Field mountable cables for interlocking of breakers [1]

Interlock Type	Interlock Scheme: No. of Cables Needed		Cat. No.	Ref. No.
A	1 cable per breaker, choose length as indicated			
B	2 cables per breaker, choose length as indicated	Cable length 1 metre	GCB1	**407990**
		Cable length 1.5 metre	GCB2	**407991**
C	2 cables per breaker, choose length as indicated	Cable length 2 metre	GCB3	**407992**
		Cable length 2.5 metre	GCB4	**407993**
D	Brk's 1 and 3: 1 cable per breaker, choose length as indicated	Cable length 3 metre	GCB5	**407994**
		Cable length 3.5 metre	GCB6	**407995**
		Cable length 4 metre	GCB7	**407996**
	Brk. 2: 2 cables per breaker, choose length as indicated			

Time delay module for UVR release TDM

	Cat. No.	Ref. No.	Cat. No.	Ref. No.
60V DC	GTDM060D	**407817**		
110-130V DC	GTDM120D	**407819**		
220-240V DC	GTDM240D	**407821**		
250V DC	GTDM250D	**407823**		
48V AC	GTDM048A	**407816**		
110-130V AC	GTDM120A	**407818**		
220-240V AC	GTDM240A	**407820**		
250-277V AC	GTDM277A	**407822**		
380- 415V AC	GTDM400A	**407824**		
440V AC	GTDM440A	**407825**		

Breaker Earthing Device for Service

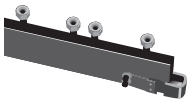

	3 pole		4 pole	
EntelliGuard™ type 1				
Maximum 1600A	G16H4ED	**407930**	G16H6ED	**407931**
Maximum 2000A	G20H4ED	**407932**	G20H6ED	**407933**
EntelliGuard™ type 2				
Maximum 4000A	G40M4ED	**407934**	G40M6ED	**407935**
EntelliGuard™ type 3				
Maximum 6400A	G64M4ED	**407936**	G64M6ED	**407937**

GT- Accessories

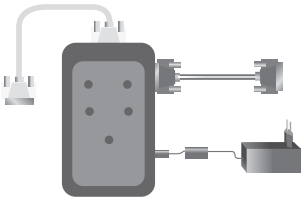

Designation		
Conditioning Power Supply 1 phase 220-230V[2]	GMPU1	**408790**
Conditioning Power Supply 1 phase 380-400V[2]	GMPU2	**408791**
Conditioning Power Supply 1 phase 240-250/277-290/415V[2]	GMPU3	**408792**
Power Supply - Input 100-240V AC or 100-353V DC - Output 24V DC 0.6 Amps[3]	GAPU	**408789**
Trip unit, sealable transparent front cover	GTUS	**408046**
Trip Unit Battery Tester	GTUTK20	**407999**
Trip Unit Battery Tester and Set up and Text software	GTUTK20S	**407081**
Trip Unit Set up and software	GTUTKS	**407083**

Wall mounting Brackets

Wall Mounting Brackets for Env. 1 & 2	GFMTG	**408085**

(1) See for associated breaker and or cassette mounted kits page A.23
(2) Obligatory when a fully functioning measurement unit is required
(3) For GF settings below 0.2 x In this aux. supply is needed

Unelec Equipment
www.unelec-equipment.com
Tel: +1 319 244 84 69 UeeS Co. Tel: +1 650 466 86 39
Info@unelec-equipment.com

Installation Accessories

Not available in a factory mounted variant

Operation	Cat. No.	Ref. No.
Front Fascia of Breaker		
Padlocking device for Pushbuttons envelope T	GTPBD	**444667**
Padlocking device for Pushbuttons envelope 1/2/3	GPBD	**408040**
Operation Indicators		
Contact Wear Indicator env. 1-3	GCNTW	**408036**
Cassette		
Mis insertion device envelope T	GTREPM	**444674**
Mis insertion device envelope 1/2/3	GREPM	**408041**

Door Flanges & Interlocks		
Door Flange fixed envelope T [1]	GTDPRF	**444805**
Door Flange fixed envelope 1/2/3 [1]	GDPRF	**408025**
Door Flange draw-out envelope T [1]	GTPRW	**444806**
Door Flange draw-out envelope 1/2/3 [1]	GDPRW	**408026**
Door Escutcheon IP54 envelope 1/2/3	G54DR	**408038**
Door Interlock envelope 1/2/3	GLHD	**408039**
Door Interlock envelope 1/2/3	GRHD	**408042**
Door Interlock on LEFT envelope T	GTLHD	**444256**
Door Interlock on RIGHT envelope T	GTRHD	**444257**

Lifting Breakers[2]		
Lifting beam suited for use with envelope 1 and 2	GLB1	**408045**
Lifting beam suited for use with envelope 3	GLB3	**408049**

Phase seperators		
Set of 9 phase seperators for Envelope 1, 2 & 3 (Needed for 1000V applications)	GJP	**408057**
Set of 9 phase seperators for Envelope T	GTJP	**444255**

(1) Is a spare, these devices are always supplied with the standard devices.
(2) Designed for use with commercially available lifting equipment.
The Envelope T is supplied with lifting handles.

Unelec Equipment
www.unelec-equipment.com
Tel: +1 319 244 84 69 UeeS Co. Tel: +1 650 466 86 39
Info@unelec-equipment.com

Sensors for all GT type Trip Units

For use with Ground fault Residual (sum) protection
Rogowski coils:

	Envelope T & 1		Envelope 2		Envelope 3	
	Cat. No.	Ref. No.	Cat. No.	Ref. No.	Cat. No.	Ref. No.
400A	G04HNRC	**408000**	G04HNRC	**408000**		
630A	G07HNRC	**408001**	G07HNRC	**408001**		
800A	G08HNRC	**408002**	G08HNRC	**408002**		
1000A	G10HNRC	**408003**	G10HNRC	**408003**		
1250A	G13HNRC	**408004**	G13HNRC	**408004**		
1600A	G16HNRC	**408005**	G16HNRC	**408005**		
2000A	G20HNRC	**408006**	G20HNRC	**408006**		
2500A			G25MNRC	**408162**		
3200A			G32LNRC	**408186**	G32LNRC	**408186**
4000A			G40LNRC	**408187**	G40LNRC	**408187**
5000A					G50LNRC	**408188**
6400A					G64LNRC	**408189**

Sensors for GT-H and GT-HE type Trip Units

For use with Ground fault protection, Source Ground Return method
Earth leg Current Transformers
- Kit includes 1 Current Transformer. An interposing current transformer is also required (supplied with Trip Unit)

	Envelope T & 1		Envelope 2		Envelope 3	
	Cat. No.	Ref. No.	Cat. No.	Ref. No.	Cat. No.	Ref. No.
400A	G04HNCT	**408300**	G04HNCT	**408300**		
630A	G07HNCT	**408301**	G07HNCT	**408301**		
800A	G08HNCT	**408302**	G08HNCT	**408302**		
1000A	G10HNCT	**408303**	G10HNCT	**408303**		
1250A	G13HNCT	**408304**	G13HNCT	**408304**		
1600A	G16HNCT	**408305**	G16HNCT	**408305**		
2000A	G20HNCT	**408006**	G20HNCT	**408006**		
2500A			G25MNCT	**408322**		
3200A			G32LNCT	**408331**	G32LNCT	**408331**
4000A			G40LNCT	**408332**	G40LNCT	**408332**
5000A					G50LNCT	**408333**
6400A					G64LNCT	**408334**

Unelec Equipment
www.unelec-equipment.com
Tel: +1 319 244 84 69 UeeS Co. Tel: +1 650 466 86 39
Info@unelec-equipment.com

Cassettes for use with Breakers & Isolators in Draw-out pattern; Field mountable

- References apply for Cassettes separately supplied for use with Breakers or Isolator
- With Connection modes as indicated in left column
- Each cassette is supplied with safety shutters

Cassettes for Draw-out pattern; fixed portion only

Universal Rear Connections

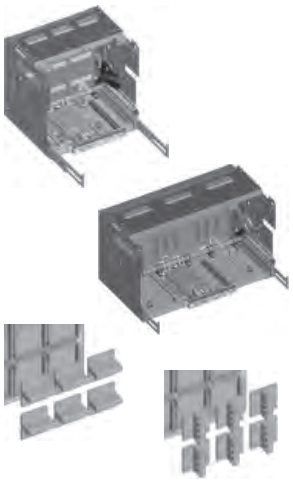

Rating (A)	Suited for use with EntelliGuard™ -G types	3 pole Cat. No.	3 pole Ref. No.	4 pole[1] Cat. No.	4 pole[1] Ref. No.
Cassette for envelope T					
400 - 1600A	GT type R & K and G7 type R	GT16K2UR	**444701**	GT16K5UR	**444704**
Cassette for envelope 1					
400 - 1600A	GG, GJ & GW type S	GG16S2UR	**407617**	GG16S5UR	**407619**
1600A	GG, GJ & GW type N & H	GG16H2UR	**407612**	GG16H5UR	**407615**
2000A	GG, GJ & GW type S, N & H	GG20H2UR	**407622**	GG20H5UR	**407625**
Cassette for envelope 2[2]					
400 - 2000A	GG, GJ & GW type N, E & M	GG20M2UR	**407632**	GG20M5UR	**407635**
2500A	GG, GJ & GW type N, H & M	GG25M2UR	**407642**	GG25M5UR	**407645**
3200A	GG, GJ & GW type N, H & M	GG32M2UR	**407652**	GG32M5UR	**407656**
4000A	GG, GJ & GW type N, H & M	GG40M2UR	**407666**	GG40M5UR	**407670**
Remark: Each cassette is supplied with connection pads that can be rotated and used for Vertical or Horizontal connections.					
Cassette for envelope 3[3]					
3200 - 6400A[1]	GG & GJ type G, M & L	GG64L2UR	**407686**	GG64L5UR	**407688**

Horizontal rear Connections

Cassette for envelope T					
400 - 1600A	GT type R & K and G7 type R	GT16K2HR	**444702**	GT16K5HR	**444705**

Vertical rear Connections

Cassette with dual vertical clusters and connection pads for limited de-rating envelope 2					
3200A	GH, GK, GJ & GZ type N.H & M	GH32M2VR	**408254**	GH32M5VR	**408255**
4000A	GH, GK, GJ & GZ type N.H & M	GH40M2VR	**408267**	GH40M5VR	**408268**

Front access Connections

Cassette for envelope T					
400 - 1600A	GT type R & K and G7 type R	GT16K2FR	**444700**	GT16K5FR	**444703**
Cassette for envelope 1					
400 - 1600A	GG, GJ & GW type S	GG16S2FR	**407627**	GG16S5FR	**407629**
1600A	GG, GJ & GW type N & H	GG16H2FR	**407610**	GG16H5FR	**407613**
2000A	GG, GJ & GW type S, N & H	GG20H2FR	**407620**	GG20H5FR	**407623**
Cassette for envelope 2					
400 - 2000A	GG, GJ & GW type E, N, H & M	GG20M2FR	**407630**	GG20M5FR	**407633**
2500A	GG, GJ & GW type N, H & M	GG25M2FR	**407640**	GG25M5FR	**407643**
3200A	GG, GJ & GW type N, H & M	GG32M2FR	**407650**	GG32M5FR	**407654**
4000A	GG, GJ & GW type N, H & M	GG40M2FR	**407658**	GG40M5FR	**407668**

(1) 4th pole on Left.
(2) Cassettes for envelope 2 are limited to a current of **3200A when connected in horizontal mode**
Connected in vertical mode a 4000A rating is achieved
(3) The Cassette for envelope 3 is limited to a current of **5000A when connected in horizontal mode**
Connected in vertical mode it has a rating of 6400A. This cassette type is NOT depicted here

Unelec Equipment
www.unelec-equipment.com
Tel: +1 319 244 84 69 UeeS Co. Tel: +1 650 466 86 39
Info@unelec-equipment.com

Field Mounted (spare) Trip Units

	Basic functionality	Designation	Extended functionality	Cat. No.	Ref. No.
GT- E		**GT-E Trip Unit with:**	None	GTG00K2-SR	**408802**
	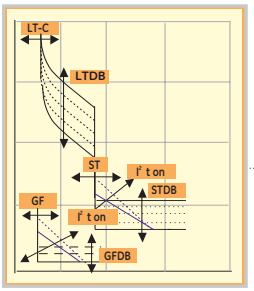	LT-C 0.2 -1 x In = Ir LT-F 0.2 -1 x In = Ir LTDB ST I²T ON or OFF STDB GF I²T ON or OFF GFDB			
		GT-Rating Plug	Required for all T types	GTPUNI	**408860**
GT- S		**GT-S Trip Unit**	Modbus Communication	GTG00K4-2SR	**408809**
	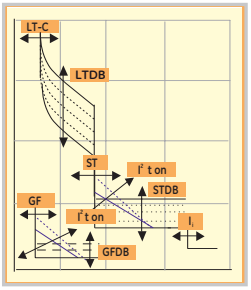	LT-C 0.2 -1 x In = Ir LT-F 0.2 -1 x In = Ir LTDB ST I²T ON or OFF STDB GF I²T ON or OFF GFDB I			
		GT-Rating Plug	Required for all types	GTPUNI	**408860**
GT- N		**GT-N Trip Unit**	Measurement unit[1] Modbus Communication Zone Selective Interlock on ST, I & GF	GTG00K4T6SR	**408819**
	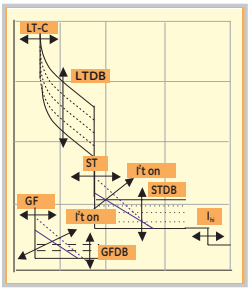	LT-C 0.2 -1 x In = Ir LT-F 0.2 -1 x In = Ir LTDB ST I²T ON or OFF STDB GF I²T ON or OFF GFDB I ext.			
		GT-Rating Plug	Required for all types	GTPUNI	**408860**

(1) An auxiliary Power Conditioner is obligatory when a fully functioning measurement is required see page A.26

Unelec Equipment
www.unelec-equipment.com
Tel: +1 319 244 84 69 UeeS Co. Tel: +1 650 466 86 39
Info@unelec-equipment.com

Field Mounted (spare) Trip Units

GT- H

Basic functionality

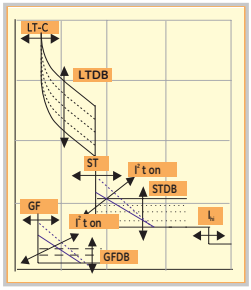

Extended functionality

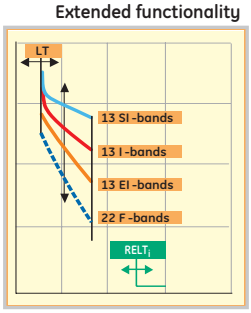

Designation	Extended functionality	Cat. No.	Ref. No.
GT-H Trip Unit with:	A choice of FIVE LT band shapes	GTG00N5T8SR	**408849**
LT0.2 -1 x In = Ir	Dual GF Protection (Res./Sum or CT)		
LTDB	Zone Selective Interlock on ST, I & GF		
ST I²T ON or OFF	Measurement Unit(1)		
STDB	Data aquisition & Relay functionality		
GF or GFA sum with	RELT Instantaneous		
I²T ON or OFF	Modbus Communication		
GF or GFA CT with	With standard Instaneous		
I²T ON or OFF	*Idem with Extended Instananeous*	GTG00N7T8SR	**408851**
GFDB			
I ext.	A choice of FIVE LT band shapes	GTG00N5T9SR	**408853**
RELT	Dual GF Protection (Res./Sum or CT)		
LT, ST, I and both	Zone Selective Interlock on ST, I & GF		
GF functions can be	Measurement Unit(1)		
switched ON or OFF	Data aquisition & Relay functionality		
	RELT Instantaneous		
	Profibus Communication		
	With standard Instaneous		
	Idem with Extended Instananeous	GTG00N7T9SR	**408855**
	A choice of FIVE LT band shapes	GTG00N6T8SR	**408850**
	Dual GF Alarm (Res./Sum or CT)(2)		
	Zone Selective Interlock on ST, I & GFA		
	Measurement Unit(1)		
	Data aquisition & Relay functionality		
	RELT Instantaneous		
	Modbus Communication		
	With standard Instaneous		
	Idem with Extended Instananeous	GTG00N8T8SR	**408852**
	A choice of FIVE LT band shapes	GTG00N6T9SR	**408854**
	Dual GF Alarm (Res./Sum or CT)		
	Zone Selective Interlock on ST, I & GFA		
	Measurement Unit(1)		
	Data aquisition & Relay functionality		
	RELT Instantaneous		
	Profibus Communication		
	With standard Instaneous		
	Idem with Extended Instananeous	GTG00N8T9SR	**408856**
GT-Rating Plug	Required for all types	GTPUNI	**408860**
GT Trip Unit with NO protection	For use with Non Automatic types with MCR	G3G00KA-SR	**408796**

(1) An auxiliary Power Conditioner is obligatory when a fully functioning measurement is required see page A.26
(2) Does NOT trip the associated EntelliGuard G™ Breaker, BUT produces an Alarm signal

Unelec Equipment
www.unelec-equipment.com
Tel: +1 319 244 84 69 UeeS Co. Tel: +1 650 466 86 39
Info@unelec-equipment.com

Spare Parts

	Envelope T		Envelope 1		Envelope 2		Envelope 3	
	Cat. No.	Ref. No.	Cat. No.	Ref. No.	Cat. No.	Ref. No.	Cat. No.	Ref. No.
Breaker Arc Chutes								
Arc Chute for 1 pole	GT16KCHT	444801	G20HCHT	408102	G40MCHT	408131	G64LCHT	408144
Breaker Fixed Arcing Contacts								
Set for 1pole R & K types	GT16KARC	444802						
Set for 1pole S & N types			G20NARC	408104				
Set for 1pole H type			G20HARC	408098				
Set for 1pole E & N types					G40NARC	408172		
Set for 1pole H & M types					G40MARC	408169		
Set for 1pole L type							G64LARC	408193
Cassette Shutters								
System with Interlock 3 pole	GT16N2SSL	444253	G20H2SSL	407606	G40M2SSL	407636	G64L2SSL	407679
System with Interlock 4 pole	GT16N5SSL	444254	G20H5SSL	407607	G40M5SSL	407637	G64L5SSL	407680
Cassette Racking Handle								
Spare Racking Handle	GRHN	408043	GRHN	408043	GRHN	408043	GRHN	408043
Breaker front facia part(1)								
Front Facia	GTFAL	444804	GFA4	408028	GFA4	408028	GFA4	408028
Set of 4 spare Lock cams for use with Ronis 1104 locks			GRONCS	407984	GRONCS	407984	GRONCS	407984
Cassette Cluster Contacts								
Sets per pole								
Current Rating 400-1600A	GT16KCLS	444800						
Current Rating 400-1250A			G13HCLS	408097				
Current Rating 1600A			G16HCLS	408100				
Current Rating 2000A			G20HCLS	408103				
Current Rating ≥2000A					G20MCLS	408106		
Current Rating 2500A					G25MCLS	408109		
Current Rating 3200A					G32MCLS	408117		
Current Rating 4000A					G40MCLS	408120		
Current Rating 5000A							G50LCLS	408145
Current Rating 6400A							G64LCLS	408148
Set of Universal Cluster Pliers	GUNI	408047	GUNI	408047	GUNI	408047	GUNI	408047
Breakers and Cassette Spare Auxiliary Disconnect plugs								
For Fixed Breaker 1 39 pole "Block A"	GTSDFTR	444258	GSFDTR1	408052	GSFDTR1	408052	GSFDTR1	408052
For Fixed Breaker 1 78 pole "Block A and B"			GSFDTR2	408030	GSFDTR2	408030	GSFDTR2	408030
For Draw-out Breaker 1 39 pole set "Block B"	GTSDWTR	444259	GSDWTR	408054	GSDWTR	408054	GSDWTR	408054
For Fixed and Draw-out Breaker 1 16 pole "Block C"	GTHDTUF	444710						

(1) The original breaker serial number must be indicated on ordering
(2) Envelope 1, 2 and 3 - two can be mounted.
Envelope T - one can be mounted.

Unelec Equipment
www.unelec-equipment.com
Tel: +1 319 244 84 69 UeeS Co. Tel: +1 650 466 86 39
Info@unelec-equipment.com

Notes

Global Catalogue number structure - Breaker

- Codes built in the indicated manner can be used as an alternative ordering method
- The breaker and its operation mode (Manual or Electrical)

1st digit

Product Line Definition	
EntelliGuard G Breaker & Switch line	G

3rd & 4th digit

Nominal current rating of the product	
400A	04
630A	07
800A	08
1000A	10
1250A	13
1600A	16
2000A	20
2500A	25
3200A	32
4000A	40
5000A	50
6400A	64

6th digit

Fixed pattern or Draw-out pattern moving portion and Number of Poles	
3 pole Draw-out Moving Portion	1
4 pole Draw-out Mov. Portion Neutral left (standard)	3
3 Pole Fixed pattern	4
4 Pole Fixed pat. Neutral Left (standard)	6

7th digit

Electrically or Hand Operated	
Electrical at:	
24V DC	A
48V DC	B
60V DC	C
110-130V DC	E
220V DC	6
250V DC	F
48V AC	G
110-130V AC	H
230-240V AC	J
277V AC	K
380-415V AC	M
440V AC	N
Manual	X

G G 1 3 H 4 X X

Product Type	
Circuit Breaker EntelliGuard G Envelope 1, 2 or 3	G
Circuit Breaker EntelliGuard G Envelope T	T
Circuit Breaker EntelliGuard G with "Limited Derating"	H
Non Automatic (Switch) EntelliGuard G Envelope 1, 2 or 3 with **NO** MCR [2]	J
Non Automatic (Switch) EntelliGuard G Envelope T with **NO** MCR [2]	7
Non Automatic (Switch) EntelliGuard G Envelope 1, 2 or 3 **WITH** MCR [2]	K
Non Automatic (Switch) EntelliGuard G with "Limited Derating" Envelope 1, 2 or 3 with **NO** MCR [2]	K
Non Automatic (Switch) EntelliGuard G with "Limited Derating" Envelope 1, 2 or 3 **WITH** MCR [2]	Z

Interruption / short-circuit withstand rating of the product			
Icu = Ics	Icw	Code	Remarks
50kA	42kA	R	Env. T
50kA	50kA	S	Env. 1
65kA	50kA	K	Env. T
65kA	65kA	N	Env. 1 & 2
85kA	85kA	H	Env. 1
85kA	85kA	E[3]	Env. 2
85kA	85kA	H[3]	Env. 2
100kA	85kA	M	Env. 2
100kA	100kA	G	Env. 3
150kA	100kA	L	Env. 3

Voltage Rating	Standard Closing Coil	Command Closing Coil[1]
24V DC	A	M
40-48VDC 48V AC	B	P
60-72 V DC	D	Q
110-130V AC-DC	E	R
220-240V AC-DC	G	T
250V DC 277V AC	H	U
380-415V AC	K	W
440V AC	L	Y
None	X	X

If Electrically Operated add 1 Closing Coil by indicating voltage rating code. if manual use an X as indicated

Envelope 1/2/3 only

Envelope T only

2nd digit | **5th digit** | **8th digit**

(1) Is supplied with a Push Button for Local Breaker operation (fits on breaker front facia)
(2) MCR= Making Current Release; device that enhances the Switches performance.
(3) E used by devices ≤2000A, the H is used by devices of 2500, 3200 and 4000A

Unelec Equipment
www.unelec-equipment.com
Tel: +1 319 244 84 69 UeeS Co. Tel: +1 650 466 86 39
Info@unelec-equipment.com

Global Catalogue number structure - Breaker

- Codes built in the indicated manner can be used as an alternative ordering method
- Breaker mounted accessories and Trip Unit

9th digit

Shunt Release with Continuous Rating	
Voltage Rating	Code
24V DC	A
30V DC	B
40-48VDC 48V AC	C
60V DC	D
110-130V AC-DC	E
220-240V AC-DC	G
250V DC 277V AC	H
380-415V AC	K
440V AC	L
Shunt Release Impulse Rated	
24V AC or DC	U
110-130V AC or DC	F
220-240V AC or DC	J
Remote Reset Coil [1]	
Voltage Rating	Code
24V DC	Z
110-130V AC-DC	5
220-240V AC-DC	7
Network Interlock [1]	
Network Interlock	1
None	X

Add 1st Shunt Release or Remote Rest Coil by indicating voltage rating code. if not needed use an X as indicated, or '1' for a network Interlock

10th digit

Undervoltage Release	
Voltage Rating	Code
24V DC	1
30V DC	B
40-48VDC 48V AC	3
60V DC	4
110-130V AC-DC	5
220-240V AC-DC	7
250V DC 277V AC	8
380-415V AC	W
440V AC	Y
None	X

Add 1st UVR release by using the indicated code. If a '1' is chosen as a 9th digit the use of a Network Interlock with equivalent voltage is assumed. The use of an X indicates no Release installed.

11th digit

2nd Shunt or Undervoltage Release			
Voltage Rating	Shunt codes Cont.	Shunt codes Imp.	UVR codes
24V DC	A	U	1
30V DC	B		2
40-48V DC 48V AC	C		3
60V DC	D		4
110-130V AC-DC	E	F	5
220-240V AC-DC	G	J	7
250V DC 277V AC	H		8
380-415V AC	K		W
440V AC	L		Y
None	X		

Add a 2nd or UVR Shunt Release by indicating the voltage rating code. If not needed use an X as indicated. In the EntelliGuard G envelope T this digit is always an X.

1 8 X

Envelope 1/2/3 only

Envelope T only

Unelec Equipment
www.unelec-equipment.com
Tel: +1 319 244 84 69 UeeS Co. Tel: +1 650 466 86 39
Info@unelec-equipment.com

Global Catalogue number structure - Breaker

- Codes built in the indicated manner can be used as an alternative ordering method
- The breaker and its operation mode (Manual or Electrical)

12th digit

Auxiliary Switches & Configuration

Type	Code to be added[1]										
3NO+3NC (Power Rated) [1]	2	A	B	C	D	E	F	G	H	S	T
4NO+4NC (Power Rated)	3										
8NO+8NC (Power Rated)	4										
3NO/3NC (Power Rated) + 2NO/2NC (Signal)	6	J	K	L	M	N	P	Q	R	U	V
4NO/4NC (Power Rated) + 4NO/4NC Signal)	8										
	No other contacts installed	Coil Signaling Contact Power (1 NO on Secondary Disconnect) - Close Coil or command close coil	Coil Signaling Contact High Fidelity through Trip Unit - Close Coil or command close coil	Coil Signaling Contact Power (1 NO on Secondary Disconnect) - 1st Shunt	Coil Signaling Contact High Fidelity through Trip Unit - 1st Shunt	Coil Signaling Contact Power (1 NO on Secondary Disconnect) - 1st UVR	Coil Signaling Contact High Fidelity through Trip Unit - 1st UVR	Coil Signaling Contact Power (1 NO on Secondary Disconnect) - 2nd ST or 2nd UVR	Coil Signaling Contact High Fidelity through Trip Unit - 2nd ST or 2nd UVR	Coil Signaling Contact Power (1 NO on Secondary Disconnect) - All installed devices CC/CCC, ST, or UVR)	Coil Signaling Contact High Fidelity (1 NO -Through Trip Unit) - All installed devices, CC/CCC, ST, or UVR)

14th digit

Factory Installed prevision to mount a Key lock on the breakers

For Profalux Key lock	P
For Ronis Key lock	R
For Large Castell type Key lock	C
Pushbutton Padlock Device	L
Large Castell Key Interlock & Push Button Pad. Device	1
Ronis Key Interlock and Push Button Padlock Device	3
Profalux Key Interlock & Push Button Pad. Device	4
No prevision for Key lock	X

2 A X X

13th digit

Designation	Code to be added[1]			
Bell Alarm 1 NO Power rated	A	D	E	F
Bell Alarm 1 NO Signal rated	N	P	R	S
Mechanical Operations Counter	B	K	L	M
Bell Alarm 1NO power rated & Mechanical Operations ctr.	C	G	H	J
Bell Alarm 1NO signal rated & Mechanical Operations ctr.	T	U	V	Y
Ready to Close contact 1 NO Power Rated on Secondary terminals	1			
Ready to Close contact 1 NO Signal Rated on Secondary terminals	2			
Ready to Close contact 1 NO Signal Rated connected Through Trip Unit	3			
Ready to Close contact 1 NC Power Rated on Secondary terminals	4			
Ready to Close contact 1 NC Signal Rated on Secondary terminals	5			
Ready to Close contact 1 NC Signal Rated connected Through Trip Unit	6			
None	X			
No other contacts installed	Ready to Close contact 1 NO Power Rated on Secondary terminals	Ready to Close contact 1 NO Signal Rated on Secondary terminals	Ready to Close contact 1 NO Signal Rated connected Through Trip Unit	

Envelope 1/2/3 only

Envelope T only

15th digit

Factory Installed prevision to mount a Cable interlock between breakers

Mechanical Interlock -Type A or D supply	1
Mechanical Interlock Type B all	2
Mechanical Interlock Type C all	3
Mechanical Interlock Type D tie only	4
No prevision for Breaker interlock	X

Factory Installed prevision to mount a Cable interlock between breakers.

(1) Each standard breaker or Isolator is normally supplied with 3 NO+3 NC Aux. contacts.

Unelec Equipment
www.unelec-equipment.com
Tel: +1 319 244 84 69 UeeS Co. Tel: +1 650 466 86 39
Info@unelec-equipment.com

Global Catalogue number structure - Breaker

- Codes built in the indicated manner can be used as an alternative ordering method
- Breaker mounted accessories and Trip Unit

16th, 17th & 18th digit

Defines Installed GT type Electronic Trip Unit			
Basic type	**Code**	**Functionality**	**Code**
GT-E with Ammeter	E	ST & STDB only	00
		LT, LTDB (C+F)v. ST, STDB	01
		LT, LTDB (C+F). ST, STDB, GF, GFDB	02
GT-S with Ammeter and Optional Modbus Communication	S	LT, LTDB (C+F). ST, STDB, I	06
		LT, LTDB (C+F). ST, STDB, I, GF, GFDB	07
		LT, LTDB (C+F). ST, STDB, I, GF, GFDB + Modbus Communication + RELT	09
		LT, LTDB (C+F). ST, STDB, HI, GF, GFDB	03
		LT, LTDB (C+F). ST, STDB, HI, GF, GFDB + Modbus Communication + RELT	05
GT-N with Measurement and Optional Modbus Communication	N	LT, LTDB (C+F). ST, STDB, I	08
		LT, LTDB (C+F). ST, STDB, I, GF, GFDB	10
		LT, LTDB (C+F). ST, STDB, I, GF, GFDB + ZSI on ST and GF + Modbus communication	11
		LT, LTDB (C+F). ST, STDB, HI, GF, GFDB	04
		LT, LTDB (C+F). ST, STDB, HI, GF, GFDB + ZSI on ST and GF + Modbus communication	12
GT-H with Measurement, RELT, Relaying and Waveform Capture, Optional Modbus or Profibus Communication	H	LT+ (C+F),LTDB,ST,STDB.GF+EF,HI	13
		LT+ (C+F),LTDB,ST,STDB.GF+EF,HI + Modbus Communication	14
		LT+ (C+F),LTDB,ST,STDB.GF+EF,HI + Profibus Communication	15
		LT+ (C+F),LTDB,ST,STDB.GF+EF,HI ZSI on ST, GF & HI	16
		LT+ (C+F),LTDB,ST,STDB.GF+EF,HI ZSI on ST, GF & HI + Modbus Communication	17
		LT+ (C+F),LTDB,ST,STDB.GFA+EFA,HI	18
		LT+ (C+F),LTDB,ST,STDB.GFA+EFA,HI + Modbus Communication	19
		LT+ (C+F),LTDB,ST,STDB.GFA+EFA,HI + Profibus Communication	20
		LT+ (C+F),LTDB,ST,STDB.GFA+EFA,HI ZSI on ST, GFA & HI	21
		LT+ (C+F),LTDB,ST,STDB.GFA+EFA,HI ZSI on ST, GFA & HI + Modbus Communication	22
		LT+ (C+F),LTDB,ST,STDB.I	23
		LT+ (C+F),LTDB,ST,STDB.GF+EF,I	24
		LT+ (C+F),LTDB,ST,STDB.GF+EF,I + Modbus Communication	25
		LT+ (C+F),LTDB,ST,STDB.GF+EF,I + Profibus Communication	26
		LT+ (C+F),LTDB,ST,STDB.GF+EF,I ZSI on ST, GF & I	27

Defines Installed GT type Electronic Trip Unit			
Basic type	**Code**	**Functionality**	**Code**
GT-H with Measurement, RELT, Relaying and Waveform Capture, Optional Modbus or Profibus Communication	H	LT+ (C+F),LTDB,ST,STDB.GF+EF, I ZSI on ST, GF & I + Modbus Communication	28
		LT+ (C+F),LTDB,ST,STDB.GF+EF, I ZSI on ST, GF & I + Profibus Communication	29
		LT+(C+F),LTDB,ST,STDB.GFA+EFA,& I	30
		LT+(C+F),LTDB,ST,STDB.GFA+EFA, I + Modbus Communication	31
		LT+(C+F),LTDB,ST,STDB.GFA+EFA, I + Profibus Communication	32
		LT+C+F),LTDB,ST,STDB.GFA+EFA,IZSI on ST, GFA & I	33
		LT+(C+F),LTDB,ST,STDB.GFA+EFA,IZSI on ST, GFA & I + Modbus Communication	34
		LT+(C+F),LTDB,ST,STDB.GFA+EFA,I, ZSI on ST, GFA & I + Profibus Communication	35
		LT+ (C+F),LTDB,ST,STDB.I + Modbus Communication	36
		LT+ (C+F),LTDB,ST,STDB.I + Profibus Communication	37
		LT+(C+F),LTDB,ST,STDB.GF+EF,HI + Profibus Communication	38
		LT+C+F),LTDB,ST,STDB.GFA+EFA,HI ZSI on ST, GFA & HI + Profibus Communication	39
		LT+ (C+F),LTDB,ST,STDB.EF(U.K.),I	51
		LT+ (C+F),LTDB,ST,STDB.EF(U.K.),I + Modbus Communication	55
		LT+ (C+F),LTDB,ST,STDB.EF(U.K.),I + Profibus Communication	59
		LT+ (C+F),LTDB,ST,STDB.EF(U.K.),I ZSI on ST, GF & I	52
		LT+ (C+F),LTDB,ST,STDB.EF(U.K.),I ZSI on ST, GF & I + Modbus Communication	56
		LT+ (C+F),LTDB,ST,STDB.EF(U.K.),I ZSI on ST, GF & I + Profibus Communication	60
		LT+ (C+F),LTDB,ST,STDB.EF(U.K.),HI	53
		LT+ (C+F),LTDB,ST,STDB.EF(U.K.),HI + Modbus Communication	57
		LT+ (C+F),LTDB,ST,STDB.EF(U.K.),HI + Profibus Communication	61
		LT+ (C+F),LTDB,ST,STDB.EF(U.K.),HI ZSI on ST, GF & HI	54
		LT+ (C+F),LTDB,ST,STDB.EF(U.K.),HI ZSI on ST, EF & HI + Modbus Communication	58
		LT+(C+F),LTDB,ST,STDB.EFA(U.K.),I, ZSI on ST, EFA & I + Profibus Communication	62

Remark: The 18 digit cataloge number covers an assembled and packed Power Circuit Breaker with a tri lingual User Manual.
For more information, you can visit our website.
United Kingdom : www.ge.com/uk/industrialsolutions
Middle East: www.ge.com/ex/industrialsolutions

Global Catalogue number structure - Cassette

- Codes built in the indicated manner can be used as an alternative ordering method
- Cassettes supplied together with the breaker

1st digit

Product Line Definition	
Cassettes for use with the EntelliGuard G Breaker & Switch line	G

3rd and 4th digit

Nominal current rating of the product	
1250A	13
1600A	16
2000A	20
2500A	25
3200A	32
4000A	40
6400A	64

6th digit

Number of Poles of the Cassette	
3 pole	2
4 pole	5

7th digit

Connection Mode	
Rear Universal, T stubs rotatable -Horizontal or Vertical busbars.	U
Front Flat access	F
Rear Horizontal busbars	H
Rear Vertical busbars	V

9th digit

Position Indication switches in Cassette	
Set of 1 NO and 1NC contacts per Position	2
Set of 2 NO and 2NC contacts per Position	4
Carriage Position Switch - 1 NO/1NC power rated, 1 NO/1NC signal rated	5
No Switches Mounted	X

G G 16 S 2 U X X M

2nd digit

Suitable for:	
Standard Circuit Breaker or Non Automatic type Envelope 1, 2 or 3	G
Standard Circuit Breaker or Non Automatic type Envelope T	T
Circuit Breaker or Non Automatic type with "Limited Derating" Envelope 2 only.	H
SEN EVO Standard Circuit Breaker or Non Automatic type Envelope 1, 2 or 3	J
SEN EVO Circuit Breaker or Non Automatic type with "Limited Derating" Envelope 2 only.	K

5th digit

Interruption / short-circuit with-stand rating of the Breaker used with the Cassette		
Icu = Ics	Icw	Code
65kA	50kA	K
50kA	50kA	S
85kA	65kA	H
100kA	85kA	M
150kA	100kA	L

Envelope 1/2/3 only

Envelope T only

8th digit

Delivered mounted with breaker or separatley	
Mounted with Breaker	M
Deliverd as a separate component	R

10th digit

Factory Installed prevision to mount a Key lock on the cassette	
For 1 Ronis Key lock	R
For 2 Ronis Key locks	S
For 1 Profalux Key lock	P
For 2 Profalux Key locks	Q
1 Ronis key lock shutter interlock	T
1 Profalux key lock shutter interlock	U
No Lock Prevision mounted	X

Unelec Equipment
www.unelec-equipment.com
Tel: +1 319 244 84 69 UeeS Co. Tel: +1 650 466 86 39
Info@unelec-equipment.com

Valid Catalogue number combinations

Factory mounted: Available standard Breaker and Cassette types

3 pole Breakers in fixed pattern		
Cat. No	Ref. No.	Page
GG04E4	407003	A.4
GG04H4	407007	A.4
GG04M4	407011	A.5
GG04N4	407015	A.4
GT04K4	444548	A.4
GG04S4	407019	A.4
GT04R4	444542	A.4
GG07E4	407032	A.4
GG07H4	407036	A.4
GG07M4	407040	A.5
GG07N4	407044	A.4
GT07K4	444549	A.4
GG07S4	407048	A.4
GT07R4	444543	A.4
GG08E4	407062	A.4
GG08H4	407066	A.4
GG08M4	407070	A.5
GG08N4	407074	A.4
GT08K4	444550	A.4
GG08S4	407078	A.4
GT08R4	444544	A.4
GG10E4	407092	A.4
GG10H4	407096	A.4
GG10M4	407100	A.5
GG10N4	407104	A.4
GT10K4	444551	A.4
GG10S4	407108	A.4
GT10R4	444545	A.4
GG13E4	407122	A.4
GG13H4	407126	A.4
GG13M4	407130	A.5
GG13N4	407134	A.4
GT13K4	444552	A.4
GG13S4	407138	A.4
GT13R4	444546	A.4
GG16E4	407152	A.4
GG16H4	407156	A.4
GG16M4	407160	A.5
GG16N4	407164	A.4
GT16K4	444553	A.4
GG16S4	407168	A.4
GT16R4	444547	A.4
GG20E4	407192	A.4
GG20H4	407196	A.4
GG20M4	407200	A.5
GG20N4	407204	A.4
GG20S4	407208	A.4
GG25H4	407232	A.4
GG25M4	407236	A.5
GG25N4	407240	A.4
GG32G4	407252	A.5
GG32H4	407244	A.4
GG32L4	407254	A.5
GG32M4	407262	A.5
GG32N4	407266	A.4
GG40G4	407270	A.5
GG40H4	407280	A.4
GG40L4	407284	A.5
GG40M4	407288	A.5
GG40N4	407292	A.5
GG64L4	407322	A.5
GG64M4	407326	A.5
GG50L4	407302	A.5
GG50M4	407306	A.5

4 pole Breakers in fixed pattern		
Cat. No	Ref. No.	Page
GG04E6	407004	A.4
GG04H6	407008	A.4
GG04M6	407012	A.5
GG04N6	407016	A.4
GT04K6	444569	A.4
GG04S6	407020	A.4
GT04R6	444563	A.4
GG07E6	407033	A.4
GG07H6	407037	A.4
GG07M6	407041	A.5
GG07N6	407045	A.4
GT07K6	444570	A.4
GG07S6	407049	A.4
GT07R6	444564	A.4
GG08E6	407063	A.4
GG08H6	407067	A.4
GG08M6	407071	A.5
GG08N6	407075	A.4
GT08K6	444571	A.4
GG08S6	407079	A.4
GT08R6	444565	A.4
GG10E6	407093	A.4
GG10H6	407097	A.4
GG10M6	407101	A.5
GG10N6	407105	A.4
GT10K6	444572	A.4
GG10S6	407109	A.4
GT10R6	444566	A.4
GG13E6	407123	A.4
GG13H6	407127	A.4
GG13M6	407131	A.5
GG13N6	407135	A.4
GT13K6	444573	A.4
GG13S6	407139	A.4
GT13R6	444567	A.4
GG16E6	407153	A.4
GG16H6	407157	A.4
GG16M6	407161	A.5
GG16N6	407165	A.4
GT16K6	444574	A.4
GG16S6	407169	A.4
GT16R6	444568	A.4
GG20E6	407193	A.4
GG20H6	407197	A.4
GG20M6	407201	A.5
GG20N6	407205	A.4
GG20S6	407209	A.4
GG25H6	407233	A.4
GG25M6	407237	A.5
GG25N6	407241	A.4
GG32H6	407245	A.4
GG32G6	407253	A.5
GG32L6	407255	A.5
GG32M6	407263	A.5
GG32N6	407267	A.4
GG40G6	407271	A.5
GG40H6	407281	A.4
GG40L6	407285	A.5
GG40M6	407289	A.5
GG40N6	407293	A.4
GG50L6	407303	A.5
GG50M6	407307	A.5
GG64L6	407323	A.5
GG64M6	407327	A.5

3 pole Breakers; Draw-out Portion only		
Cat. No	Ref. No.	Page
GG04E1	407001	A.9
GG04H1	407005	A.9
GG04M1	407009	A.10
GG04N1	407013	A.9
GT04K1	444506	A.9
GG04S1	407017	A.9
GT04R1	444500	A.9
GG07E1	407030	A.9
GG07H1	407034	A.9
GG07M1	407038	A.10
GG07N1	407042	A.9
GT07K1	444507	A.9
GG07S1	407046	A.9
GT07R1	444501	A.9
GG08E1	407060	A.9
GG08H1	407064	A.9
GG08M1	407068	A.10
GG08N1	407072	A.9
GT08K1	444508	A.9
GG08S1	407076	A.9
GT08R1	444502	A.9
GG10E1	407090	A.9
GG10H1	407094	A.9
GG10M1	407098	A.10
GG10N1	407102	A.9
GT10K1	444509	A.9
GG10S1	407106	A.9
GT10R1	444503	A.9
GG13E1	407120	A.9
GG13H1	407124	A.9
GG13M1	407128	A.10
GG13N1	407132	A.9
GT13K1	444510	A.9
GG13S1	407136	A.9
GT13R1	444504	A.9
GG16E1	407150	A.9
GG16H1	407154	A.9
GG16M1	407158	A.10
GG16N1	407162	A.9
GT16K1	444511	A.9
GG16S1	407166	A.9
GT16R1	444505	A.9
GG20E1	407190	A.9
GG20H1	407194	A.9
GG20M1	407198	A.10
GG20N1	407202	A.9
GG20S1	407206	A.9
GG25H1	407230	A.9
GG25M1	407234	A.10
GG25N1	407238	A.9
GG32G1	407250	A.10
GG32H1	407242	A.9
GG32L1	407248	A.10
GG32M1	407260	A.10
GG32N1	407264	A.9
GG40G1	407268	A.10
GG40H1	407278	A.9
GG40L1	407282	A.10
GG40M1	407286	A.10
GG40N1	407290	A.9
GG50L1	407300	A.10
GG50M1	407304	A.10
GG64L1	407320	A.10
GG64M1	407324	A.10
GH32H1	407346	A.11
GH32M1	407348	A.11
GH32N1	407350	A.11
GH40H1	407352	A.11
GH40M1	407354	A.11
GH40N1	407356	A.11

3 pole Breakers; Standard Cassette for Draw-out portion		
Cat. No	Ref. No.	Page
GT16K2FM	444690	A.14
GT16K2UM	444691	A.14
GT16K2HM	444692	A.14
GG16H2FM	408200	A.14
GG16H2UM	408202	A.14
GG16S2FM	407626	A.14
GG16S2UM	407616	A.14
GG20H2FM	408210	A.14
GG20H2UM	408212	A.14
GG20M2FM	408222	A.14
GG20M2UM	408224	A.14
GG25M2FM	408234	A.14
GG25M2UM	408236	A.14
GG32M2FM	408245	A.14
GG32M2UM	408247	A.14
GG40M2FM	408257	A.14
GG40M2UM	408259	A.14
GG64L2UM	408281	A.14
GH32M2VM	408292	A.14
GH40M2VM	408294	A.14

Unelec Equipment
www.unelec-equipment.com
Tel: +1 319 244 84 69 UeeS Co. Tel: +1 650 466 86 39
Info@unelec-equipment.com

Valid Catalogue number combinations

Factory mounted: Available standard Breaker, Cassette and Trip Unit types

4 pole Breakers; Draw-out Portion only		
Cat. No	Ref. No.	Page
GG04E3	407002	A.9
GG04H3	407006	A.9
GG04M3	407010	A.10
GG04N3	407014	A.9
GT04K3	444526	A.9
GG04S3	407018	A.9
GT04R3	444520	A.9
GG07E3	407031	A.9
GG07H3	407035	A.9
GG07M3	407039	A.10
GG07N3	407043	A.9
GT07K3	444527	A.9
GG07S3	407047	A.9
GT07R3	444521	A.9
GG08E3	407061	A.9
GG08H3	407065	A.9
GG08M3	407069	A.10
GG08N3	407073	A.9
GT08K3	444528	A.9
GG08S3	407077	A.9
GT08R3	444522	A.9
GG10E3	407091	A.9
GG10H3	407095	A.9
GG10M3	407099	A.10
GG10N3	407103	A.9
GT10K3	444529	A.9
GG10S3	407107	A.9
GT10R3	444523	A.9
GG13E3	407121	A.9
GG13H3	407125	A.9
GG13M3	407129	A.10
GG13N3	407133	A.9
GT13K3	444530	A.9
GG13S3	407137	A.9
GT13R3	444524	A.9
GG16E3	407151	A.9
GG16H3	407155	A.9
GG16M3	407159	A.10
GG16N3	407163	A.9
GT16K3	444531	A.9
GG16S3	407167	A.9
GT16R3	444525	A.9
GG20E3	407191	A.9
GG20H3	407195	A.9
GG20M3	407199	A.10
GG20N3	407203	A.9
GG20S3	407207	A.9
GG25H3	407231	A.9
GG25M3	407235	A.10
GG25N3	407239	A.9
GG32G3	407251	A.10
GG32H3	407273	A.9
GG32L3	407249	A.10
GG32N3	407265	A.10
GG40G3	407269	A.9
GG40H3	407279	A.10
GG40L3	407283	A.9
GG40M3	407287	A.10
GG40N3	407291	A.10
GG50L3	407301	A.9
GG50M3	407305	A.10
GG64L3	407321	A.10
GG64M3	407325	A.10
GGM3M3	407261	A.10
GH32H3	407347	A.11
GH32M3	407349	A.11
GH32N3	407351	A.11
GH40H3	407353	A.11
GH40M3	407355	A.11
GH40N3	407357	A.11

4 pole Breakers; Standard Cassette for Draw-out portion		
Cat. No	Ref. No.	Page
GT16K5FM	444693	A.14
GT16K5UM	444694	A.14
GT16K5HM	444695	A.14
GG16H5FM	408203	A.14
GG16H5UM	408205	A.14
GG16S5FM	407628	A.14
GG16S5UM	407618	A.14
GG20H5FM	408213	A.14
GG20H5UM	408215	A.14
GG20M5FM	408225	A.14
GG20M5UM	408227	A.14
GG25M5FM	408237	A.14
GG25M5UM	408239	A.14
GG32M5FM	408249	A.14
GG32M5UM	408251	A.14
GG40M5FM	408261	A.14
GG40M5UM	408263	A.14
GG64L5UM	408283	A.14
GH32M5VM	408293	A.14
GH40M5VM	408295	A.14

Global Trip Units		
Cat. No	Ref. No.	Page
GTG00K1-SF	408800	A.15
GTG00K2-SF	408801	A.15
GTG00K3-2SF	408807	A.15
GTG00K3-4SF	408815	A.16
GTG00K3-SF	408805	A.15
GTG00K3T6SF	408817	A.16
GTG00K4-2SF	408808	A.15
GTG00K4-4SF	408816	A.16
GTG00K4-SF	408806	A.15
GTG00K4T6SF	408818	A.16
GTG00K9-4SF	408813	A.16
GTG00K9-SF	408803	A.15
GTG00N5-5SF	408825	A.17
GTG00N5-8SF	408833	A.17
GTG00N5-9SF	408841	A.17
GTG00N5T5SF	408829	A.17
GTG00N5T8SF	408837	A.17
GTG00N5T9SF	408845	A.17
GTG00N6-5SF	408826	A.19
GTG00N6-8SF	408834	A.19
GTG00N6-9SF	408842	A.19
GTG00N6T5SF	408830	A.19
GTG00N6T8SF	408838	A.19
GTG00N6T9SF	408846	A.19
GTG00N7-5SF	408827	A.18
GTG00N7-8SF	408835	A.18
GTG00N7-9SF	408843	A.18
GTG00N7T5SF	408831	A.18
GTG00N7T8SF	408839	A.18
GTG00N7T9SF	408847	A.18
GTG00N8-5SF	408828	A.19
GTG00N8-8SF	408836	A.19
GTG00N8-9SF	408844	A.19
GTG00N8T5SF	408832	A.19
GTG00N8T8SF	408840	A.19
GTG00N8T9SF	408848	A.19
GTG00N9-5SF	408823	A.17
GTG00N9-8SF	408863	A.17
GTG00N9-9SF	408865	A.17
GTG00ND-5SF	408755	A.20
GTG00ND-8SF	408756	A.20
GTG00ND-9SF	408757	A.20
GTG00NDT5SF	408750	A.20
GTG00NDT8SF	408751	A.20
GTG00NFT8SF	408759	A.20
GTG00NDT9SF	408753	A.20
GTG00NF-5SF	408763	A.20
GTG00NF-8SF	408764	A.20
GTG00NF-9SF	408765	A.20
GTG00NFT5SF	408758	A.20
GTG00NFT9SF	408761	A.20
GTPUNI	408860	A.17

Unelec Equipment
www.unelec-equipment.com
Tel: +1 319 244 84 69 UeeS Co. Tel: +1 650 466 86 39
Info@unelec-equipment.com

Valid Catalogue number combinations

Factory mounted: Available standard Isolator and Cassette types

3 pole Isolators in fixed pattern		
Cat. No	**Ref. No.**	**Page**
G704R4	**444616**	A.6
G707R4	**444617**	A.6
G708R4	**444618**	A.6
G710R4	**444619**	A.6
G713R4	**444620**	A.6
G716R4	**444621**	A.6
GJ04S4	**407380**	A.6
GJ07S4	**407400**	A.6
GJ08S4	**407420**	A.6
GJ10S4	**407440**	A.6
GJ13S4	**407460**	A.6
GJ16S4	**407480**	A.6
GJ20S4	**407500**	A.6
GJ25N4	**407520**	A.6
GJ32L4	**407535**	A.6
GJ32N4	**407539**	A.6
GJ40L4	**407556**	A.6
GJ40N4	**407560**	A.6
GJ50L4	**407567**	A.6
GJ64L4	**407577**	A.6
GW04M4	**408350**	A.6
GW04N4	**407376**	A.6
GW07M4	**408352**	A.6
GW07N4	**407396**	A.6
GW08M4	**408354**	A.6
GW08N4	**407416**	A.6
GW10M4	**408356**	A.6
GW10N4	**407436**	A.6
GW13M4	**408358**	A.6
GW13N4	**407456**	A.6
GW16M4	**408360**	A.6
GW16N4	**407476**	A.6
GW20M4	**408362**	A.6
GW20N4	**407496**	A.6
GW25M4	**408364**	A.6
GW32M4	**408366**	A.6
GW40M4	**408368**	A.6

4 pole Isolators in fixed pattern		
Cat. No	**Ref. No.**	**Page**
G704R6	**444632**	A.6
G707R6	**444633**	A.6
G708R6	**444634**	A.6
G710R6	**444635**	A.6
G713R6	**444636**	A.6
G716R6	**444637**	A.6
GJ04S6	**407381**	A.6
GJ07S6	**407401**	A.6
GJ08S6	**407421**	A.6
GJ10S6	**407441**	A.6
GJ13S6	**407461**	A.6
GJ16S6	**407481**	A.6
GJ20S6	**407501**	A.6
GJ25N6	**407521**	A.6
GJ32L6	**407536**	A.6
GJ32N6	**407540**	A.6
GJ40L6	**407557**	A.6
GJ40N6	**407561**	A.6
GJ50L6	**407568**	A.6
GJ64L6	**407578**	A.6
GW04M6	**408351**	A.6
GW04N6	**407377**	A.6
GW07M6	**408353**	A.6
GW07N6	**407397**	A.6
GW08M6	**408355**	A.6
GW08N6	**407417**	A.6
GW10M6	**408357**	A.6
GW10N6	**407437**	A.6
GW13M6	**408359**	A.6
GW13N6	**407457**	A.6
GW16M6	**408361**	A.6
GW16N6	**407477**	A.6
GW20M6	**408363**	A.6
GW20N6	**407497**	A.6
GW25M6	**408365**	A.6
GW32M6	**408367**	A.6
GW40M6	**408369**	A.6

3 pole Isolators; Draw-out Portion only		
Cat. No	**Ref. No.**	**Page**
G704R1	**444585**	A.12
G707R1	**444586**	A.12
G708R1	**444587**	A.12
G710R1	**444588**	A.12
G713R1	**444589**	A.12
G716R1	**444590**	A.12
GJ04S1	**407378**	A.12
GJ07S1	**407398**	A.12
GJ08S1	**407418**	A.12
GJ10S1	**407438**	A.12
GJ13S1	**407458**	A.12
GJ16S1	**407478**	A.12
GJ20S1	**407498**	A.12
GJ25N1	**407518**	A.12
GJ32L1	**407533**	A.12
GJ32N1	**407537**	A.12
GJ40L1	**407554**	A.12
GJ40N1	**407558**	A.12
GJ50L1	**407565**	A.12
GJ64L1	**407575**	A.12
GK32N1	**407591**	A.13
GK40N1	**407595**	A.13
GW04M1	**408400**	A.12
GW04N1	**407374**	A.12
GW07M1	**408402**	A.12
GW07N1	**407394**	A.12
GW08M1	**408404**	A.12
GW08N1	**407414**	A.12
GW10M1	**408406**	A.12
GW10N1	**407434**	A.12
GW13M1	**408408**	A.12
GW13N1	**407454**	A.12
GW16M1	**408410**	A.12
GW16N1	**407474**	A.12
GW20M1	**408412**	A.12
GW20N1	**407494**	A.12
GW25M1	**408414**	A.12
GW32M1	**408416**	A.12
GW40M1	**408418**	A.12
GZ32H1	**407589**	A.13
GZ40H1	**407593**	A.13

3 pole Isolators; Standard Cassette for Draw-out portion		
Cat. No	**Ref. No.**	**Page**
GT16K2FM	**444690**	A.14
GT16K2UM	**444691**	A.14
GT16K2HM	**444692**	A.14
GG16H2FM	**408200**	A.14
GG16H2UM	**408202**	A.14
GG16S2FM	**407626**	A.14
GG16S2UM	**407616**	A.14
GG20H2FM	**408210**	A.14
GG20H2UM	**408212**	A.14
GG20M2FM	**408222**	A.14
GG20M2UM	**408224**	A.14
GG25M2FM	**408234**	A.14
GG25M2UM	**408236**	A.14
GG32M2FM	**408245**	A.14
GG32M2UM	**408247**	A.14
GG40M2FM	**408257**	A.14
GG40M2UM	**408259**	A.14
GG64L2UM	**408281**	A.14
GH32M2VM	**408292**	A.14
GH40M2VM	**408294**	A.14

Unelec Equipment
www.unelec-equipment.com
Tel: +1 319 244 84 69 UeeS Co. Tel: +1 650 466 86 39
Info@unelec-equipment.com

Valid Catalogue number combinations

Factory mounted: Available standard Isolator and Cassette types

4 pole Isolators; Draw-out Portion only					
Cat. No	Ref. No.	Page	Cat. No	Ref. No.	Page
G704R3	444600	A.12	GK40N3	407596	A.13
G707R3	444601	A.12	GW04M3	408401	A.12
G708R3	444602	A.12	GW04N3	407375	A.12
G710R3	444603	A.12	GW07M3	408403	A.12
G713R3	444604	A.12	GW07N3	407395	A.12
G716R3	444605	A.12	GW08M3	408405	A.12
GJ04S3	407379	A.12	GW08N3	407415	A.12
GJ07S3	407399	A.12	GW10M3	408407	A.12
GJ08S3	407419	A.12	GW10N3	407435	A.12
GJ10S3	407439	A.12	GW13M3	408409	A.12
GJ13S3	407459	A.12	GW13N3	407455	A.12
GJ16S3	407479	A.12	GW16M3	408411	A.12
GJ20S3	407499	A.12	GW16N3	407475	A.12
GJ25N3	407519	A.12	GW20M3	408413	A.12
GJ32L3	407534	A.12	GW20N3	407495	A.12
GJ32N3	407538	A.12	GW25M3	408415	A.12
GJ40L3	407555	A.12	GW32M3	408417	A.12
GJ40N3	407559	A.12	GW40M1	408418	A.12
GJ50L3	407566	A.12	GZ32H3	407590	A.13
GJ64L3	407576	A.12	GZ40H3	407594	A.13
GK32N3	407592	A.13			

4 pole Isolators; Standard Cassette for Draw-out portion		
Cat. No	Ref. No.	Page
GT16K5FM	444693	A.14
GT16K5UM	444694	A.14
GT16K5HM	444695	A.14
GG16H5FM	408203	A.14
GG16H5UM	408205	A.14
GG16S5FM	407628	A.14
GG16S5UM	407618	A.14
GG20H5FM	408213	A.14
GG20H5UM	408215	A.14
GG20M5FM	408225	A.14
GG20M5UM	408227	A.14
GG25M5FM	408237	A.14
GG25M5UM	408239	A.14
GG32M5FM	408249	A.14
GG32M5UM	408251	A.14
GG40M5FM	408261	A.14
GG40M5UM	408263	A.14
GG64L5UM	408283	A.14
GH32M5VM	408293	A.14
GH40M5VM	408295	A.14

Valid Catalogue number combinations

Accessories, Factory mountable

Factory Mounted Accessories								
Cat. No	Ref. No.	Page	Cat. No	Ref. No.	Page	Cat. No	Ref. No.	Page
GAS5	407886	A.22	GM01024D	407700	A.22	GMT0120A	444250	A.22
GAS6	407887	A.22	GM01048D	407702	A.22	GMT0240A	444638	A.22
GAS8	407888	A.22	GM01060D	407704	A.22	GMT0400A	444639	A.22
GBAT1	407891	A.22	GM01110D	407706	A.22	GMT0440A	444640	A.22
GBCAS	407970	A.23	GM01220D	407720	A.22	GSST024	407789	A.22
GBPRO	407978	A.23	GM01250D	407708	A.22	GSST120	407791	A.22
GBRON	407971	A.23	GM01048A	407710	A.22	GSST240	407793	A.22
GCCC024D	407836	A.22	GM01120A	407712	A.22	GSTR024D	407770	A.22
GCCC048	407838	A.22	GM01240A	407714	A.22	GSTR048	407772	A.22
GCCC060D	407840	A.22	GM01400A	407716	A.22	GSTR060D	407774	A.22
GCCC120	407842	A.22	GM01440A	407718	A.22	GSTR120	407776	A.22
GCCC240	407844	A.22	GM02024D	407725	A.22	GSTR240	407778	A.22
GCCC277	407849	A.22	GM02048D	407727	A.22	GSTR277	407780	A.22
GCCC400A	407852	A.22	GM02060D	407729	A.22	GSTR400A	407782	A.22
GCCC440A	407853	A.22	GM02110D	407731	A.22	GSTR440A	407784	A.22
GCCN024D	407861	A.22	GM02220D	407722	A.22	GTAS3	444655	A.22
GCCN048	407863	A.22	GM02250D	407733	A.22	GTAS4	444656	A.22
GCCN060D	407865	A.22	GM02048A	407735	A.22	GTBAT1	444660	A.22
GCCN120	407867	A.22	GM02120A	407737	A.22	GTBATS1	444661	A.22
GCCN240	407869	A.22	GM02240A	407739	A.22	GTCPS1	444790	A.22
GCCN277	407870	A.22	GM02400A	407741	A.22	GTCPS2	444792	A.22
GCCN400A	407877	A.22	GM02440A	407743	A.22	GTCPSA	444794	A.22
GCCN440A	407878	A.22	GMCN	408035	A.23	GUVT024D	407795	A.22
GCPRO	407980	A.23	GMT0024D	444630	A.22	GUVT048	407797	A.22
GCPSA	407055	A.22	GMT0048D	444631	A.22	GUVT060D	407799	A.22
GCPS1	407922	A.22	GMT0060D	444248	A.22	GUVT120	407801	A.22
GCPS2	407923	A.22	GMT0110D	444249	A.22	GUVT240	407803	A.22
GCRON	407976	A.23	GMT0220D	444251	A.22	GUVT277	407805	A.22
GCSP1	407895	A.22	GMT0250D	444252	A.22	GUVT400A	407807	A.22
GCSP2	407896	A.22	GMT0048A	444247	A.22	GUVT440A	407809	A.22

Unelec Equipment
www.unelec-equipment.com
Tel: +1 319 244 84 69 UeeS Co. Tel: +1 650 466 86 39
Info@unelec-equipment.com

Valid Catalogue number combinations

Accessories, Factory and Field mountable

Field Mountable Alternative versions					
Cat. No	Ref. No.	Page	Cat. No	Ref. No.	Page
GAS5R	407881	A.24	GM02048DR	407736	A.24
GAS6R	407882	A.24	GM02120DR	407738	A.24
GAS8R	407883	A.24	GM02240DR	407740	A.24
GBAT1R	407889	A.24	GM02400DR	407742	A.24
GBCASR	407967	A.25	GM02440DR	407744	A.24
GBPROR	407979	A.25	GMCNR	408033	A.25
GBRONR	407968	A.25	GMT0024DR	444641	A.24
GCCC024DR	407835	A.24	GMT0048DR	444642	A.24
GCCC048R	407837	A.24	GMT0060DR	444643	A.24
GCCC060DR	407839	A.24	GMT0110DR	444644	A.24
GCCC120R	407841	A.24	GMT0220DR	444645	A.24
GCCC240R	407843	A.24	GMT0250DR	444646	A.24
GCCC277R	407850	A.24	GMT0048AR	444647	A.24
GCCC400AR	407851	A.24	GMT0120AR	444648	A.24
GCCC440AR	407854	A.24	GMT0240AR	444649	A.24
GCCN024DR	407860	A.24	GMT0400AR	444650	A.24
GCCN048R	407862	A.24	GMT0440AR	444651	A.24
GCCN060DR	407864	A.24	GSTR024DR	407771	A.24
GCCN120R	407866	A.24	GSTR048R	407773	A.24
GCCN240R	407868	A.24	GSTR060DR	407775	A.24
GCCN277R	407871	A.24	GSTR120R	407777	A.24
GCCN400AR	407876	A.24	GSTR240R	407779	A.24
GCCN440AR	407879	A.24	GSTR277R	407781	A.24
GCPROR	407981	A.25	GSTR400AR	407783	A.24
GCPSAR	407056	A.24	GSTR440AR	407785	A.24
GCPS1R	407924	A.24	GSTS024R	407790	A.24
GCPS2R	407925	A.24	GSTS120R	407792	A.24
GCRONR	407974	A.25	GTAS3R	444658	A.24
GCSP1R	407915	A.24	GTAS4R	444659	A.24
GCSP2R	407916	A.24	GTBAT1R	444672	A.24
GM01024DR	407701	A.24	GTBATS1R	444661	A.24
GM01048DR	407703	A.24	GTCPS1R	444791	A.24
GM01060DR	407705	A.24	GTCPS2R	444793	A.24
GM01110DR	407707	A.24	GTCPSAR	444795	A.24
GM01220DR	407721	A.24	GTSDFTR	444258	A.32
GM01250DR	407709	A.24	GTSDWTR	444259	A.32
GM01048DR	407711	A.24	GUVT024DR	407796	A.24
GM01120DR	407713	A.24	GUVT048R	407798	A.24
GM01240DR	407715	A.24	GUVT060DR	407800	A.24
GM01400DR	407717	A.24	GUVT120R	407802	A.24
GM01440DR	407719	A.24	GUVT240R	407804	A.24
GM02024DR	407726	A.24	GUVT277R	407806	A.24
GM02048DR	407728	A.24	GUVT400AR	407808	A.24
GM02060DR	407730	A.24	GUVT440AR	407810	A.24
GM02110DR	407732	A.24			
GM02220DR	407723	A.24			
GM02250DR	407734	A.24			

Accessories only available as Factory Mounted types		
Cat. No	Ref. No.	Page
GBATS1	407890	A.22
GI2FAD	407900	A.23
GI2WAD	407901	A.23
GI3FB	407902	A.23
GI3FC	407904	A.23
GI3FDT	407906	A.23
GI3WB	407903	A.23
GI3WC	407905	A.23
GI3WDT	407907	A.23
GNTK120	407753	A.22
GNTK240	407754	A.22
GRRC024D	407760	A.22
GRRC110	407762	A.22
GRRC230	407764	A.22
GRTC1	407897	A.22
GRTC2	407899	A.22
GRTC3	407894	A.22
GRTC4	407911	A.22
GRTC5	407912	A.22
GRTC6	407913	A.22
GTBPRO	444665	A.23
GTBRON	444666	A.23
GTCPRO	444668	A.23
GTCRON	444669	A.23
GTI2FAD	444675	A.23
GTI2WAD	444676	A.23
GTI3FB	444677	A.23
GTI3WB	444678	A.23
GTI3FC	444679	A.23
GTI3WC	444680	A.23
GTI3FDT	444681	A.23
GTI3WDT	444682	A.23

Accessories only available in Field Mountable versions		
Cat. No	Ref. No.	Page
G16H4ED	407930	A.26
G16H4FFI	408060	A.7
G16H6ED	407931	A.26
G16H4RVI	408058	A.7
G16H6FFI	408062	A.7
G16H6RVI	408082	A.7
G20H4ED	407932	A.26
G20H4FFI	408061	A.7
G20H4RVIn	408059	A.7
G20H6ED	407933	A.26
G20H6FFI	408063	A.7
G20H6RVIn	408083	A.7
G32M4FFI	408066	A.7
G32M4RVI	408070	A.7
G32M6FFI	408068	A.7
G32M6RVI	408071	A.7
G40M4ED	407934	A.26
G40M4FFI	408067	A.7
G40M4RVI	408072	A.7
G40M6ED	407935	A.26
G40M6FFI	408069	A.7
G40M6RVI	408074	A.7
G54DR	408038	A.27
G64L4RVI	408073	A.7
G64L6RVI	408075	A.7
G64M4ED	407936	A.26
G64M6ED	407937	A.26
GAPU	408789	A.26
GAS3R	407880	A.24
GCAS	407986	A.25
GCB1	407990	A.26
GCB2	407991	A.26
GCB3	407992	A.26
GCB4	407993	A.26
GCB5	407994	A.26
GCB6	407995	A.26
GCB7	407996	A.26
GCNTW	408036	A.27
GDPRF	408025	A.27
GDPRW	408026	A.27
GFMTG	408085	A.7
GTLHD	444256	A.27
GTRHD	444257	A.27
GTJP	444255	A.27
GJP	408057	A.27
GLHD	408039	A.27
GLB3	408049	A.27
GLB1	408045	A.27
GMPU1	408790	A.26
GMPU2	408791	A.26
GMPU3	408792	A.26
GPBD	408040	A.27
GPRO	407987	A.25
GREPM	408041	A.27
GRHD	408042	A.27
GRON	407985	A.25
GRONCS	407984	A.32
GT16H4FFI	444625	A.7
GT16H4RVI	444626	A.7
GT16H6FFI	444627	A.7
GT16H6RVI	444628	A.7
GTDM048A	407816	A.26
GTDM060D	407817	A.26
GTDM120A	407818	A.26
GTDM120D	407819	A.26
GTDM240A	407820	A.26
GTDM240D	407821	A.26
GTDM250D	407823	A.26
GTDM277A	407822	A.26
GTDM400A	407824	A.26
GTDM440A	407825	A.26
GTDPRF	444805	A.27
GTPBD	444667	A.27
GTPRW	444806	A.27
GTREPM	444674	A.27
GTUS	408046	A.26
GTUTK20	407999	A.26
GTUTK20S	407081	A.26
GTUTKS	407083	A.26

Unelec Equipment
www.unelec-equipment.com
Tel: +1 319 244 84 69 UeeS Co. Tel: +1 650 466 86 39
Info@unelec-equipment.com

Valid Catalogue number combinations

Accessories, Sensors, Cassettes, Trip Units and Spares

Sensors (CT & Rogowski) for Ground & Earth fault options		
Cat. No	**Ref. No.**	**Page**
G04HNCT	**408300**	A.28
G04HNRC	**408000**	A.28
G07HNCT	**408301**	A.28
G07HNRC	**408001**	A.28
G08HNCT	**408302**	A.28
G08HNRC	**408002**	A.28
G10HNCT	**408303**	A.28
G10HNRC	**408003**	A.28
G13HNCT	**408304**	A.28
G13HNRC	**408004**	A.28
G16HNCT	**408305**	A.28
G16HNRC	**408005**	A.28
G20HNRC	**408006**	A.28
G25MNCT	**408322**	A.28
G25MNRC	**408162**	A.28
G32LNCT	**408331**	A.28
G32LNRC	**408186**	A.28
G40LNCT	**408332**	A.28
G40LNRC	**408187**	A.28
G50LNCT	**408333**	A.28
G50LNRC	**408188**	A.28
G64LNCT	**408334**	A.28
G64LNRC	**408189**	A.28

Separately available Standard Cassette for Draw-out portion		
Cat. No	**Ref. No.**	**Page**
GT16K2FR	**444700**	A.29
GT16K2UR	**444701**	A.29
GT16K2HR	**444702**	A.29
GT16K5FR	**444703**	A.29
GT16K5UR	**444704**	A.29
GT16K5HR	**444705**	A.29
GG16S2FR	**407627**	A.29
GG16S2UR	**407617**	A.29
GG16S5UR	**407619**	A.29
GG16S5FR	**407629**	A.29
GG16H2FR	**407610**	A.29
GG16H2UR	**407612**	A.29
GG16H5FR	**407613**	A.29
GG16H5UR	**407615**	A.29
GG20H2FR	**407620**	A.29
GG20H2UR	**407622**	A.29
GG20H5FR	**407623**	A.29
GG20H5UR	**407625**	A.29
GG20M2FR	**407630**	A.29
GG20M2UR	**407632**	A.29
GG20M5FR	**407633**	A.29
GG20M5UR	**407635**	A.29
GG25M2FR	**407640**	A.29
GG25M2UR	**407642**	A.29
GG25M5FR	**407643**	A.29
GG25M5UR	**407645**	A.29
GG32M2FR	**407650**	A.29
GG32M2UR	**407652**	A.29
GG32M5FR	**407654**	A.29
GG32M5UR	**407656**	A.29
GG40M2FR	**407658**	A.29
GG40M2UR	**407666**	A.29
GG40M5FR	**407668**	A.29
GG40M5UR	**407670**	A.29
GG64L2UR	**407686**	A.29
GG64L5UR	**407688**	A.29
GH32M2VR	**408254**	A.29
GH32M5VR	**408255**	A.29
GH40M2VR	**408267**	A.29
GH40M5VR	**408268**	A.29

Separately available 'Plug & Play' Trip Units		
Cat. No	**Ref. No.**	**Page**
GTG00K2-SR	**408802**	A.30
GTG00K4-2SR	**408809**	A.30
GTG00K4T6SR	**408819**	A.30
GTG00N5T8SR	**408849**	A.31
GTG00N5T9SR	**408853**	A.31
GTG00N6T8SR	**408850**	A.31
GTG00N6T9SR	**408854**	A.31
GTG00N7T8SR	**408851**	A.31
GTG00N7T9SR	**408855**	A.31
GTG00N8T8SR	**408852**	A.31
GTG00N8T9SR	**408856**	A.31
GTPUNI	**408860**	A.31

Separately available Spare Parts		
Cat. No	**Ref. No.**	**Page**
G13HCLS	**408097**	A.32
G16HCLS	**408100**	A.32
G20H2SSL	**407606**	A.32
G20H5SSL	**407607**	A.32
G20HARC	**408098**	A.32
G20HCHT	**408102**	A.32
G20HCLS	**408103**	A.32
G20MCLS	**408106**	A.32
G20NARC	**408104**	A.32
G25MCLS	**408109**	A.32
G32MCLS	**408117**	A.32
G40M2SSL	**407636**	A.32
G40M5SSL	**407637**	A.32
G40MARC	**408169**	A.32
G40MCHT	**408131**	A.32
G40MCLS	**408120**	A.32
G40NARC	**408172**	A.32
G50LCLS	**408145**	A.32
G64L2SSL	**407679**	A.32
G64L5SSL	**407680**	A.32
G64LARC	**408193**	A.32
G64LCHT	**408144**	A.32
G64LCLS	**408148**	A.32
GFA4	**408028**	A.32
GRHN	**408043**	A.32
GSFDTR1	**408052**	A.32
GSFDTR2	**408030**	A.32
GSDWTR	**408054**	A.32
GT16KCLS	**444800**	A.32
GT16KCHT	**444801**	A.32
GT16KARC	**444802**	A.32
GT16N2SSL	**444253**	A.32
GT16N5SSL	**444254**	A.32
GTFAL	**444804**	A.32
GTSDFTR	**444258**	A.32
GTSDWTR	**444259**	A.32
GUNI	**408047**	A.32
GTHDTUF	**444710**	A.32

Unelec Equipment
www.unelec-equipment.com
Tel: +1 319 244 84 69 UeeS Co. Tel: +1 650 466 86 39
Info@unelec-equipment.com

Electronic Trip Units

B.2 Electronic Trip Units layout & main menu
B.3 Overload Protection LT-C and LTD
B.4 Overload Protection LT-F and LTD
B.5 LT-Inverse, Very Inverse and Extremely Inverse protection
B.6 Table indicating available Long Time settings
B.7 Short-circuit Protection ST and STDB
B.8 Short-circuit Protection ST and I^2T slope
B.9 Short-circuit Protection; Instantaneous (I)
B.11 Short-circuit Protection temporary reduced I (RELT)
B.12 Setting limitations of Short-circuit devices - Short-circuit Protection: HSIOC, MCR
B.13 Ground fault Protection: GF and GFD (Residual Type)
B.14 Ground fault Protection: GF and I^2t slope
B.15 Ground Fault Protection
B.16 Zone Selective Interlock, Load Shedding and Trip indication
B.17 Measurement Functions and Power Supplies
B.18 Protective Relaying Functions; Relay and Trip Unit Inputs Wave Form Capture option
B.19 Communications Neutral protection, Reset Choice Rating Plug and Test Kit
B.20 Overview of GT Electronic Trip Unit functionality

Time Current Curves (cold state)

B.21 LT Protection device
B.22 LT Protection device
B.23 LT & ST Protection device
B.24 ST Protection device
B.26 ST and I Protection device
B.27 HSIOC & GF Protection device
B.28 GF Protection device
B.29 Terminology
B.30 Example of Full Time Current curve

Unelec Equipment
www.unelec-equipment.com
Tel: +1 319 244 84 69 UeeS Co. Tel: +1 650 466 86 39
Info@unelec-equipment.com

Electronic Trip Units layout & Main menu

State of the Art Electronic Trip Unit

All EntelliGuard™ Power Circuit Breakers are equipped with a digital electronic trip unit, available in four basic versions E, S, N and H. Each has a common design that comes with a screen providing an ammeter and allowing a simple and accurate menu driven adjustment of the breaker parameters across a broad current range.

All functionality is menu driven accessed by using 4 setting and one enter key thus allowing a fast and accurate setting of the device. These have the following functionality:

UP: Scroll up, Increment Value
DOWN: Scroll down, Decrement value
NEXT function, next page
PREVIOUS function, previous page
SAVE setting into memory

After inserting the Universal rating plug, the device can be adjusted and the installed options set. In situations where the installation is not yet connected to the power supply, the use of the separately available TESTER with Power Pack is advised (Cat No. GTUTK20).

During normal operation the trip unit is powered either from current flow in the circuit breaker's internal current transformers or from an external DC supply. When neither of these sources is available it is still possible to review and modify settings or view events in the trip unit using power from the internal battery. Depressing any key on the face of the trip unit powers the unit from its internal battery. Battery power is maintained for 20 seconds after the last key is pressed. All normal setup, meter, and status functions can be performed with battery power.

In Power On situations the Trip Unit display is only functional when the breaker is carrying at least 20% of its nominal current value (Single phase).

SET UP MENU

To enter this option begin the process by pressing the UP or DOWN key until SETUP is selected on the screen. Pressing the NEXT or PREVIOUS key allows one to enter the setup mode. After selecting this mode, all functions can be chosen by depressing the NEXT or PREVIOUS key.

Within the setup menu all breaker protection values, trip unit parameters, relaying functions in and outputs, communication and trip unit access codes are set

Each EntelliGuard™ Electronic trip units provides long-time over-current protection (**LT**), long-time delay (**LTD**) and some form of Short-circuit over-current protection (**ST and/or I, H, RELT**). Depending on the chosen Trip Unit Tier or Type and the selected options a, host of other protection, metering relaying functions and a wave form capture option are available.

In the following pages each of these functions are described in detail. A set of tabs placed below each description indicate in which Trip Unit Tier the described function is present.

METER

To enter this option begin the process by pressing the UP or DOWN key until to METER is selected on the screen. Pressing the NEXT or PREVIOUS key allows one to view various groups of measurements as Current, Voltage, real, apparent and reactive Power for the electrical system protected by the device. Both currents and voltages are computed as true rms values. All EntelliGuard™ Trip Units are equipped with an Ammeter. The full measurement package is offered in the GT-N and GT-H variants. The ammeter and other measurement options are only available when the trip unit is powered by the distribution system, the internal Trip Unit batteries or the external Test/battery pack. The full measurement package requires the use of a separately available 3 phase instrument transformer and Power Conditioner pack.

STATUS

To enter this option begin the process by pressing the UP or DOWN key until STATUS is selected on the screen. The Status option indicates the present status and settings of the trip unit and circuit breaker.

EVENTS

To enter this option begin the process by pressing the UP or DOWN key until EVENTS is selected on the screen. Pressing the NEXT or PREVIOUS key allows one to access events. Here a total of 10 events with data as event type and event magnitude are stored. The connection of a 24V DC auxiliary supply to the Trip Unit will expand this option to include a time stamp of each event.

Tripping events as LT, ST, I GF, Overload Trip imminent (pre alarm) or any other, release or relay trip event are visualized with the associated levels. It is possible to clear this so called "trip register" locally. If the Trip Unit is equipped with this option, a history of up to 256 Tripping occurrences with data as event type and event magnitude are stored.

Unelec Equipment
www.unelec-equipment.com
Tel: +1 319 244 84 69 UeeS Co. Tel: +1 650 466 86 39
Info@unelec-equipment.com

Overload Protection LT-C and LTD

Overload (LT-C) Protection

The EntelliGuard™ Electronic Trip has an extremely accurate and easy to set overload or Long Time (LT-C) Protection. It is designed to pick up overloads that exceed 112% of the set value within two hours with a tolerance of 10%[1].

The available 66 different current adjustments (see page B.4) result in an extremely broad setting range of 0.2 to 1 times the chosen breaker rating (In).

The LT-C type is designed to be used in association with down- and upstream circuit breakers and has a so called I^2t shape producing a curve form similar to standard industrial thermal magnetic protection devices.

The Time-Current protection curve depicted here is drawn in cold state. A thermal model in the device corrects for the heating of the connected lines and equipment. This device continues to track cooling even when disconnected in 'Thermal Memory'. The reconnection of power to over-heated lines and equipment thus being prevented. Thermal Memory tracks events after power disconnection for up to 12 minutes.

In order to allow an accurate adjustment to the thermal properties of the protected equipment and to finely match the curve with those of Upstream & Downstream devices 22 LTD time bands are available.

The table indicates the minimum delay time and maximum total interruption times for 3 frequently used reference points on the curve of each band.

The graph portrays the LT behaviour for the time-current bands C-4, C- 8, C-13 & C-22.

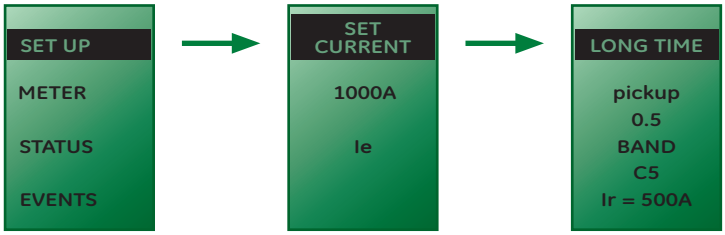

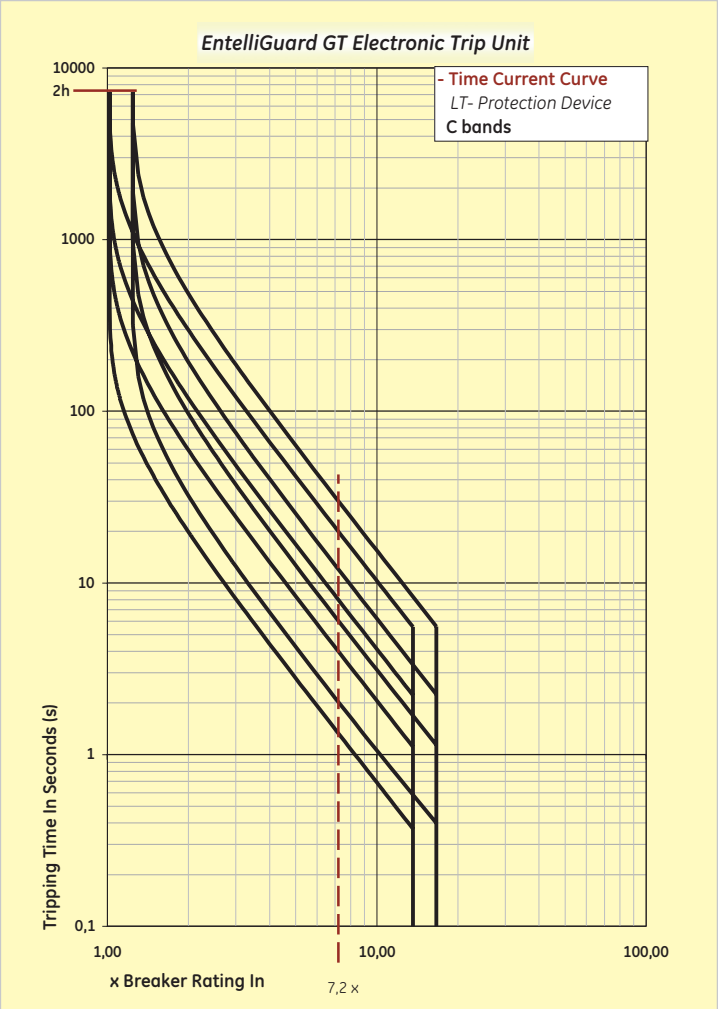

Overload Tripping times at indicated overload levels per selected LTD band, in Seconds

x Ir		Cmin	C-2	C-3	C-4	C-5	C-6	C-7	C-8	C-9	C-10	C-11	C-12	C-13	C-14	C-15	C-16	C-17	C-18	C-19	C-20	C-21	Cmax
1.5	*Max.*	7.8	23.4	46.7	62.3	93.4	125	156	187	218	249	280	311	374	436	498	560	623	685	747	810	872	934
	Min.	4.0	12.0	24.0	32.0	48.0	64.1	80.1	96.1	112	128	144	160	192	224	256	288	320	352	384	416	448	480
3	*Max.*	1.3	3.86	7.73	10.3	15.5	20.6	25.8	30.9	36.1	41.2	46.4	51.5	61.8	72.1	82.4	92.7	103	113	124	134	144	155
	Min.	0.80	2.41	4.82	6.43	9.64	12.9	16.1	19.3	22.5	25.7	28.9	32.1	38.6	45.0	51.4	57.8	64.3	70.7	77.1	83.6	90.0	96.4
7.2	*Max.*	0.21	0.62	1.24	1.66	2.49	3.32	4.15	4.98	5.81	6.64	7.47	8.30	9.96	11.6	13.3	14.9	16.6	18.3	19.9	21.6	23.2	24.9
	Min.	0.13	0.40	0.81	1.07	1.61	2.15	2.69	3.22	3.76	4.30	4.83	5.37	6.45	7.52	8.60	9.67	10.7	11.8	12.9	14.0	15.0	16.1
Motor Protection Class to IEC 947-4							10b				10			20			30			40			
		Standard on					GT-E				GT-S			GT-N				GT-H					

(1) Meeting the requirements of IEC 90647-2 and IEC 90647-4

Overload Protection LT-F and LTD

Overload (LT-F) Protection
A second type of overload protection is available. Designed to pick up overloads that exceed 112% of the set value within two hours, with a tolerance of 10%[1], it has the same 66 different current adjustments as the standard type thus offering a extremely broad setting range of 0.2 to 1 times the chosen breaker rating.
The Time-Current protection curve depicted here is drawn in cold state. A thermal model in the device corrects for the heating of the connected lines and equipment. This device continues to track cooling even when disconnected in 'Thermal Memory'. The reconnection of power to over- heated lines and equipment thus being prevented. Thermal Memory tracks events after power disconnection for up to 12 minutes.
The LT-F device is designed to be used in association with down- and upstream Fuses and produces a curve form similar to those of standard industrial fuses. A total of 22 LTD time bands are available, thus extending the total number of bands to 44.
The table indicates the minimum delay time and maximum total interruption times for 3 frequently used reference points on the curve of each band.
The graph portrays the LT behaviour for the time-current bands F-4, F-9, F-15 and F-22.

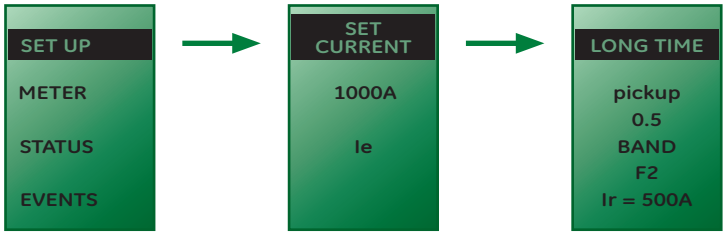

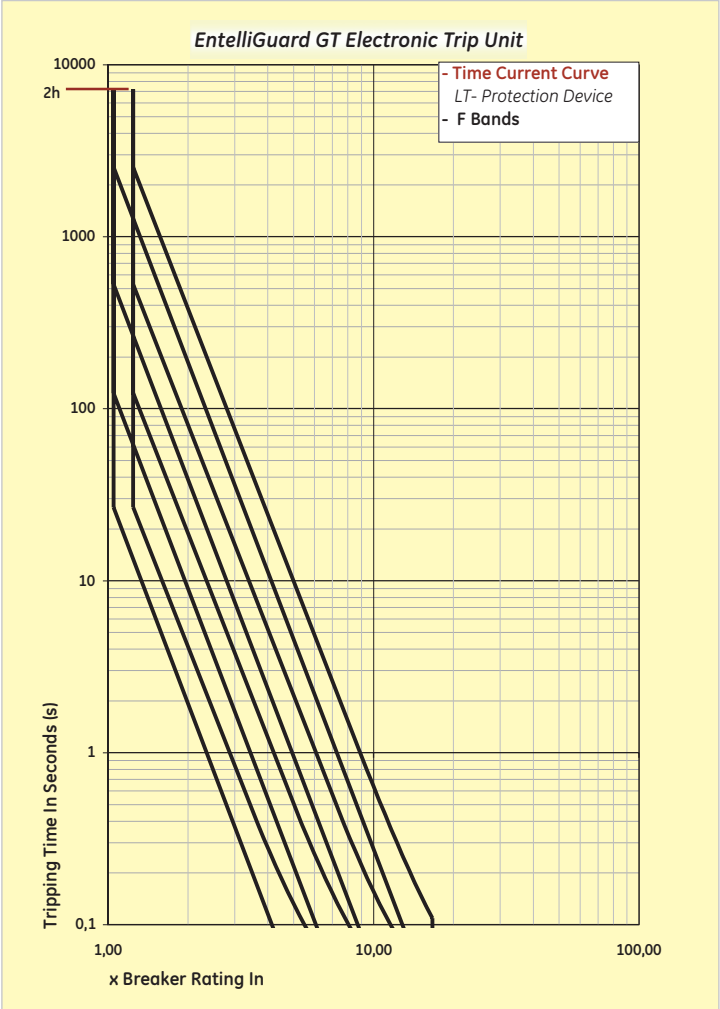

Overload Tripping times at indicated overload levels per selected LTD band. in Seconds

x Ir		Fmin	F-2	F-3	F-4	F-5	F-6	F-7	F-8	F-9	F-10	F-11	F-12	F-13	F-14	F-15	F-16	F-17	F-18	F-19	F-20	F-21	Fmax
1.5	*Max.*	1.44	4.19	7.62	11.9	17.2	23.9	32.3	42.8	56	72	93	118	150	190	239	302	380	477	600	752	942	1153
	Min.	0.64	1.87	3.39	5.30	7.67	10.7	14.4	19.0	25	32	41	53	67	85	107	135	169	213	267	335	419	514
3	*Max.*	0.09	0.26	0.48	0.74	1.08	1.50	2.01	2.67	3.49	4.51	5.80	7.39	9.39	11.9	15.0	18.9	23.8	29.9	37.5	47.0	58.9	72.1
	Min.	0.04	0.12	0.21	0.33	0.48	0.67	0.90	1.19	1.55	2.01	2.57	3.29	4.18	5.29	6.68	8.41	10.6	13.3	16.7	20.9	26.2	32.1
7.2	*Max.*					0.03	0.05	0.06	0.08	0.11	0.14	0.18	0.22	0.28	0.36	0.45	0.57	0.72	0.90	1.13	1.42	1.78	2.18
	Min.					0.01	0.02	0.03	0.04	0.05	0.06	0.08	0.10	0.13	0.16	0.20	0.25	0.32	0.40	0.50	0.63	0.79	1.03

Standard on | GT-E | GT-S | GT-N | GT-H

LT-Inverse, Very Inverse and Extremely Inverse protection

Overload (LT-Inverse) Protection

The EntelliGuard™ Electronic Trip has an extremely accurate and easy to set overload or Long Time (LT-inverse) Protection. It is designed to pick up overloads that exceed 112% of the set value within two hours with a tolerance of 10% [1]. The available 66 different current adjustments (see page B.6) result in an extremely broad setting range of 0.2 to 1 times the chosen breaker rating (In).

The LT-inverses band types are designed to be used in association with down- and upstream devices meeting the industrial IEC 60255 standard. The Time-Current protection curves depicted here are drawn in cold state.

A thermal model in the device corrects for the heating of the connected lines and equipment. This device continues to track cooling even when disconnected in 'Thermal Memory'. The reconnection of power to over-heated lines and equipment thus being prevented. Thermal Memory tracks events after power disconnection for up to 12 minutes.

In order to allow an accurate adjustment to the thermal properties of the protected equipment and to finely match the curve with those of Upstream & Downstream devices 13 LTD time bands are available in three standaised shapes (Inverse, Very Inverse & Extremly Inverse).

The tables indicates the minimum delay time and maximum total interruption times for 3 frequently used reference points on the curve of each band. The graph portrays the LT behaviour for the Inverse, Very Inverse & Extremly Inverse band shapes.

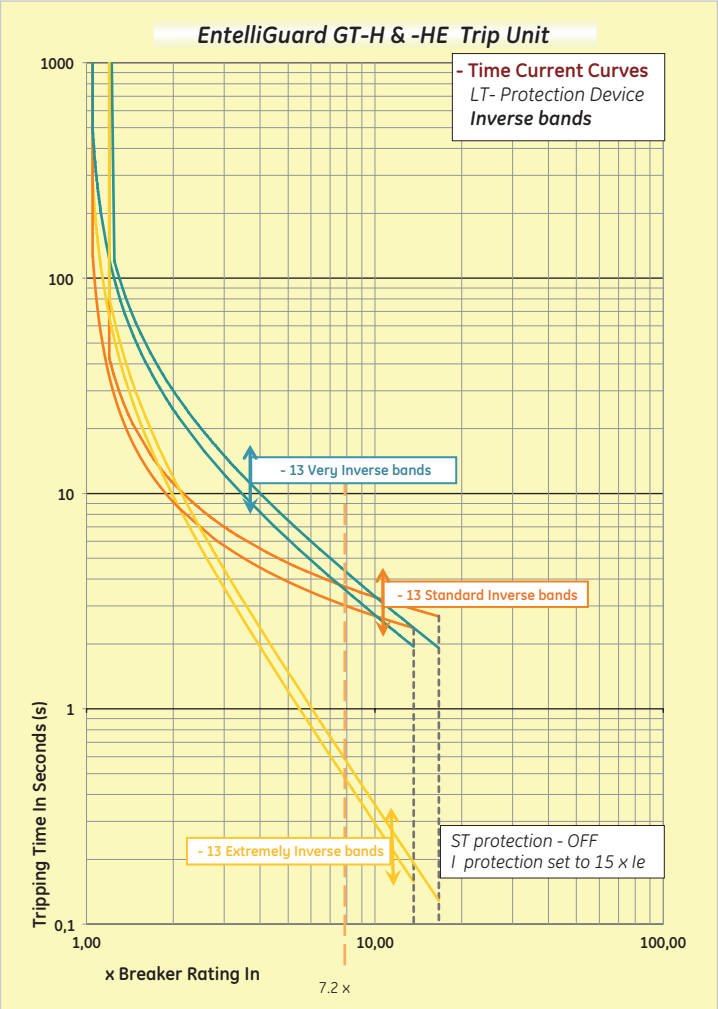

Inverse curves

	x Ir	L-0.5	L-1	L-2	L-3	L-4	L-5	L-6	L-7	L-8	L-9	L-10	L-15	L-20
1.5	Max.	1.02	2.05	4.09	6.14	8.18	10.23	12.27	14.32	16.36	18.41	20.45	30.7	40.9
	Min.	0.76	1.51	3.03	4.54	6.06	7.57	9.09	10.60	12.12	13.63	15.15	22.72	30.3
3	Max.	0.32	0.64	1.28	1.91	2.55	3.19	3.83	4.47	5.11	5.74	6.38	9.6	12.8
	Min.	0.31	0.63	1.26	1.88	2.51	3.14	3.77	4.40	5.02	5.65	6.28	9.42	12.6
7.2	Max.	0.18	0.37	0.73	1.10	1.47	1.83	2.20	2.56	2.93	3.30	3.66	5.49	7.33
	Min.	0.17	0.33	0.66	1.00	1.33	1.66	1.99	2.33	2.66	2.99	3.32	4.99	6.65

Very Inverse curves

	x Ir	L-0.5	L-1	L-2	L-3	L-4	L-5	L-6	L-7	L-8	L-9	L-10	L-15	L-20
1.5	Max.	1.69	3.38	6.75	10.13	13.50	16.88	3.38	23.63	27.00	30.38	33.75	50.6	67.5
	Min.	1.13	2.25	4.50	6.75	9.00	11.25	2.25	15.75	18.00	20.25	22.50	33.75	45.0
3	Max.	0.36	0.71	1.42	2.13	2.84	3.55	0.71	4.97	5.68	6.39	7.11	10.7	14.2
	Min.	0.32	0.64	1.29	1.93	2.57	3.21	0.64	4.50	5.14	5.79	6.43	9.64	12.9
7.2	Max.	0.11	0.22	0.44	0.66	0.89	1.11	0.22	1.55	1.77	1.99	2.21	3.32	4.43
	Min.	0.11	0.21	0.43	0.64	0.86	1.07	0.21	1.50	1.71	1.93	2.14	3.21	4.29

Extremely Inverse curves

	x Ir	L-0.5	L-1	L-2	L-3	L-4	L-5	L-6	L-7	L-8	L-9	L-10	L-15	L-20
1.5	Max.	4.23	8.46	16.92	25.38	33.85	42.31	50.77	59.23	67.69	76.15	84.62	126.9	169.2
	Min.	2.50	5.00	10.00	15.00	20.00	25.00	30.00	35.00	40.00	45.00	50.00	75.00	100.0
3	Max.	0.56	1.13	2.26	3.39	4.52	5.65	6.78	7.91	9.04	10.17	11.30	16.9	22.6
	Min.	0.44	0.88	1.76	2.64	3.52	4.40	5.27	6.15	7.03	7.91	8.79	13.19	17.6
7.2	Max.	0.09	0.17	0.35	0.52	0.70	0.87	1.04	1.22	1.39	1.56	1.74	2.61	3.48
	Min.	0.07	0.14	0.28	0.42	0.56	0.71	0.85	0.99	1.13	1.27	1.41	2.12	2.82

Standard on GT-H

Unelec Equipment
www.unelec-equipment.com
Tel: +1 319 244 84 69 UeeS Co. Tel: +1 650 466 86 39
Info@unelec-equipment.com

Table indicating available Long Time settings

Per chosen Breaker Rating (In) 66 Current values (Ir) can be set

Breaker Rating	Multip.		Primary Setting Ie values in Amps Secundary Setting Ir values in Amps				
400	1	400	390	385	380	180	160
	0.95	380	371	366	361	171	152
	0.9	360	351	347	342	162	144
	0.85	340	332	327	323	153	136
	0.8	320	312	308	304	144	128
	0.75	300	293	289	285	135	120
	0.7	280	273	270	266	126	112
	0.65	260	254	250	247	117	104
	0.6	240	234	231	228	108	96
	0.55	220	215	212	209	99	88
	0.5	200	195	193	190	90	80
630	1	630	615	610	605	280	250
	0.95	599	584	580	575	266	238
	0.9	567	554	549	545	252	225
	0.85	536	523	519	514	238	213
	0.8	504	492	488	484	224	200
	0.75	473	461	458	454	210	188
	0.7	441	431	427	424	196	175
	0.65	410	400	397	393	182	163
	0.6	378	369	366	363	168	150
	0.55	347	338	336	333	154	138
	0.5	315	308	305	303	140	125
800	1	800	784	776	768	350	315
	0.95	760	745	737	730	333	299
	0.9	720	706	698	691	315	284
	0.85	680	666	660	653	298	268
	0.8	640	627	621	614	280	252
	0.75	600	588	582	576	263	236
	0.7	560	549	543	538	245	221
	0.65	520	510	504	499	228	205
	0.6	480	470	466	461	210	189
	0.55	440	431	427	422	193	173
	0.5	400	392	388	384	175	158
1000	1	1000	980	970	960	450	400
	0.95	950	931	922	912	428	380
	0.9	900	882	873	864	405	360
	0.85	850	833	825	816	383	340
	0.8	800	784	776	768	360	320
	0.75	750	735	728	720	338	300
	0.7	700	686	679	672	315	280
	0.65	650	637	631	624	293	260
	0.6	600	588	582	576	270	240
	0.55	550	539	534	528	248	220
	0.5	500	490	485	480	225	200
1250	1	1250	1225	1210	1196	560	500
	0.95	1188	1164	1150	1136	532	475
	0.9	1125	1103	1089	1076	504	450
	0.85	1063	1041	1029	1017	476	425
	0.8	1000	980	968	957	448	400
	0.75	938	919	908	897	420	375
	0.7	875	858	847	837	392	350
	0.65	813	796	787	777	364	325
	0.6	750	735	726	718	336	300
	0.55	688	674	666	658	308	275
	0.5	625	613	605	598	280	250
1600	1	1600	1568	1552	1536	720	630
	0.95	1520	1490	1474	1459	684	599
	0.9	1440	1411	1397	1382	648	567
	0.85	1360	1333	1319	1306	612	536
	0.8	1280	1254	1242	1229	576	504
	0.75	1200	1176	1164	1152	540	473
	0.7	1120	1098	1086	1075	504	441
	0.65	1040	1019	1009	998	468	410
	0.6	960	941	931	922	432	378
	0.55	880	862	854	845	396	347
	0.5	800	784	776	768	360	315

Breaker Rating	Multip.		Primary Setting Ie values in Amps Secundary Setting Ir values in Amps				
2000	1	2000	1960	1940	1920	900	800
	0.95	1900	1862	1843	1824	855	760
	0.9	1800	1764	1746	1728	810	720
	0.85	1700	1666	1649	1632	765	680
	0.8	1600	1568	1552	1536	720	640
	0.75	1500	1470	1455	1440	675	600
	0.7	1400	1372	1358	1344	630	560
	0.65	1300	1274	1261	1248	585	520
	0.6	1200	1176	1164	1152	540	480
	0.55	1100	1078	1067	1056	495	440
	0.5	1000	980	970	960	450	400
2500	1	2500	2450	2425	2400	1125	1000
	0.95	2375	2328	2304	2280	1069	950
	0.9	2250	2205	2183	2160	1013	900
	0.85	2125	2083	2061	2040	956	850
	0.8	2000	1960	1940	1920	900	800
	0.75	1875	1838	1819	1800	844	750
	0.7	1750	1715	1698	1680	788	700
	0.65	1625	1593	1576	1560	731	650
	0.6	1500	1470	1455	1440	675	600
	0.55	1375	1348	1334	1320	619	550
	0.5	1250	1225	1213	1200	563	500
3200	1	3200	3136	3104	3072	1440	1280
	0.95	3040	2979	2949	2918	1368	1216
	0.9	2880	2822	2794	2765	1296	1152
	0.85	2720	2666	2638	2611	1224	1088
	0.8	2560	2509	2483	2458	1152	1024
	0.75	2400	2352	2328	2304	1080	960
	0.7	2240	2195	2173	2150	1008	896
	0.65	2080	2038	2018	1997	936	832
	0.6	1920	1882	1862	1843	864	768
	0.55	1760	1725	1707	1690	792	704
	0.5	1600	1568	1552	1536	720	640
4000	1	4000	3920	3880	3840	1800	1600
	0.95	3800	3724	3686	3648	1710	1520
	0.9	3600	3528	3492	3456	1620	1440
	0.85	3400	3332	3298	3264	1530	1360
	0.8	3200	3136	3104	3072	1440	1280
	0.75	3000	2940	2910	2880	1350	1200
	0.7	2800	2744	2716	2688	1260	1120
	0.65	2600	2548	2522	2496	1170	1040
	0.6	2400	2352	2328	2304	1080	960
	0.55	2200	2156	2134	2112	990	880
	0.5	2000	1960	1940	1920	900	800
5000	1	5000	4900	4850	4800	2250	2000
	0.95	4750	4655	4608	4560	2138	1900
	0.9	4500	4410	4365	4320	2025	1800
	0.85	4250	4165	4123	4080	1913	1700
	0.8	4000	3920	3880	3840	1800	1600
	0.75	3750	3675	3638	3600	1688	1500
	0.7	3500	3430	3395	3360	1575	1400
	0.65	3250	3185	3153	3120	1463	1300
	0.6	3000	2940	2910	2880	1350	1200
	0.55	2750	2695	2668	2640	1238	1100
	0.5	2500	2450	2425	2400	1125	1000
6400	1	6400	6272	6208	6144	2880	2560
	0.95	6080	5958	5898	5837	2736	2432
	0.9	5760	5645	5587	5530	2592	2304
	0.85	5440	5331	5277	5222	2448	2176
	0.8	5120	5018	4966	4915	2304	2048
	0.75	4800	4704	4656	4608	2160	1920
	0.7	4480	4390	4346	4301	2016	1792
	0.65	4160	4077	4035	3994	1872	1664
	0.6	3840	3763	3725	3686	1728	1536
	0.55	3520	3450	3414	3379	1584	1408
	0.5	3200	3136	3104	3072	1440	1280

Unelec Equipment
www.unelec-equipment.com
Tel: +1 319 244 84 69 UeeS Co. Tel: +1 650 466 86 39
Info@unelec-equipment.com

Short-circuit Protection ST and STDB

Overcurrent Protection against Short-circuit: ST, STDB

The EntelliGuard™ Electronic Trip Unit and breaker combination can be equipped with a number of different Short-circuit protection devices each with their own distinctive properties and field of application.

The Timed Short-circuit Protection Device is designed to offer selectivity over a defined current range and offers a unique combination of multiple time bands and current settings.

To allow selectivity with a wide range of different downstream devices whilst not unnecessarily sacrificing clearing time, 17 different time bands are available. The device has an adjustment range of 1.5 to 12[1] (+-10%) times the chosen Long Time current value (Ir) in steps of 0.5 (pick up setting).

The graph indicates 6 of the available 17 time bands across the full adjustment range. The table contains the minimum delay time and the maximum total interruption times for all time band settings.

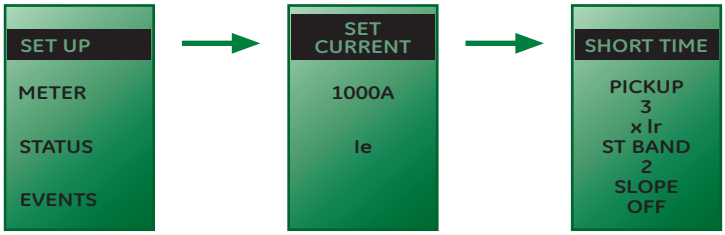

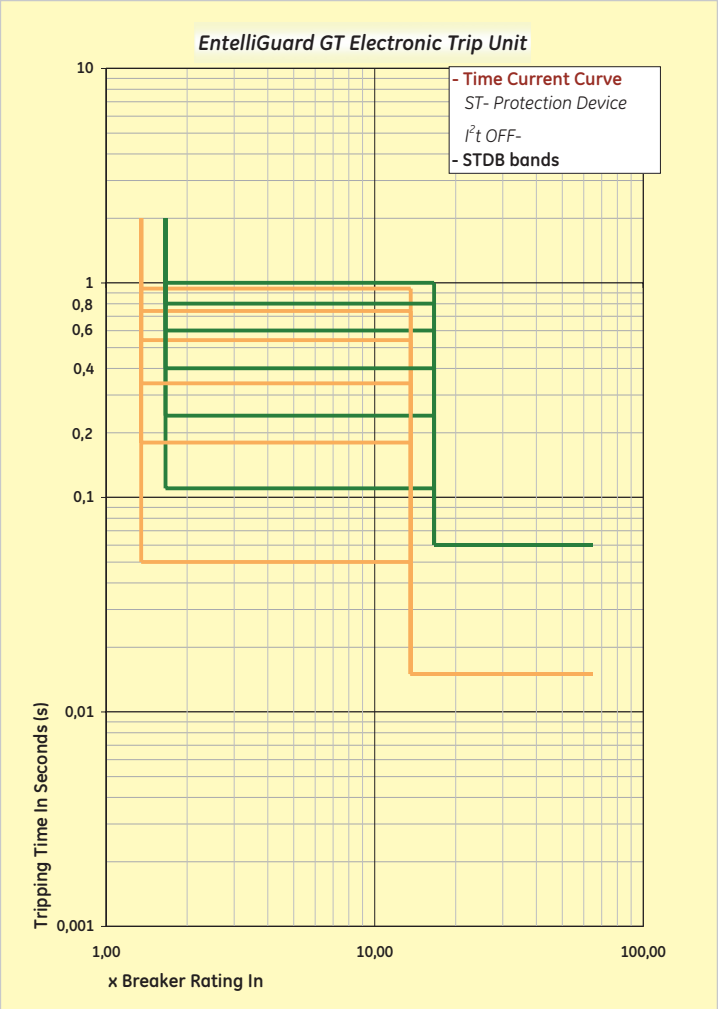

Short Time tripping times at indicated levels per selected STDB band - I²t OFF, in Milliseconds

	x Ir	Min	2	3	4	5	6	7	8	9	10	11	12	13	14	15	16	Max
1.5 x	*Tripping*	90	100	110	120	170	190	240	270	300	340	400	450	600	700	800	900	1000
±10%	*Non Tripping*	30	40	50	60	110	130	180	210	240	280	340	390	540	640	740	840	940
12 x	*Tripping*	90	100	110	120	170	190	240	270	300	340	400	450	600	700	800	900	1000
±10%	*Non Tripping*	30	40	50	60	110	130	180	210	240	280	340	390	540	640	740	840	940

Standard on | GT-E | GT-S | GT-N | GT-H

(1) Is limited to lower values in certain cases, please refer to page B.11

Short-circuit Protection ST and I²T slope

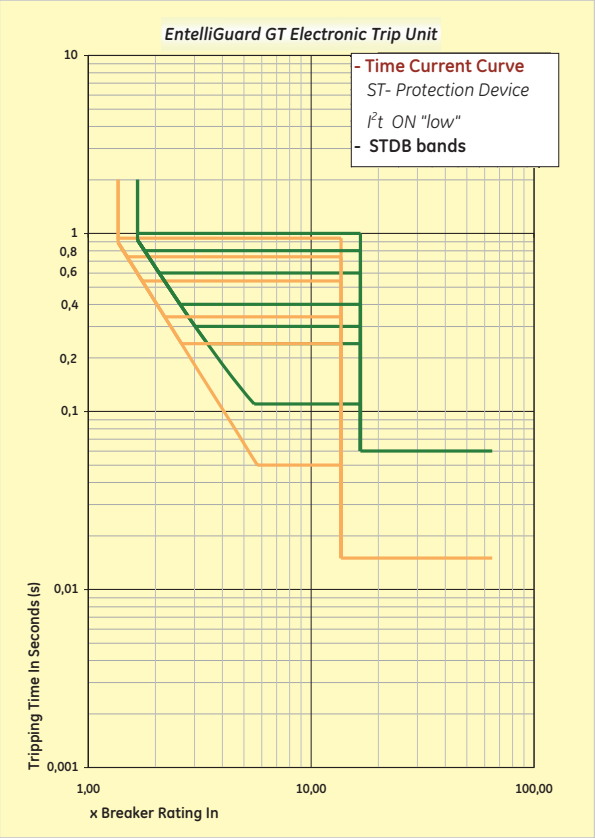

Timed Short-circuit (ST) Protection I²T Bands (slope)[1]
The ST device can also be set to a I²T slope value. The available multiple I²t slopes are normally used to achieve selectivity with downstream fuses or to improve selectivity with downstream circuit breakers.
The device has an adjustment range of 1.5 to 12 [1] (±10%) times the chosen Long Time current value (Ir) in steps of 0.5 (pick up setting) and 17 time bands.
The three graphs depict the available I²t slopes (Low, Med. or High) and their intersection with a selection of the available 17 time bands across the full adjustment range.

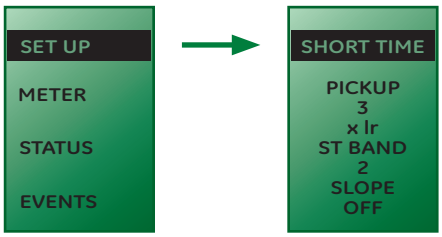

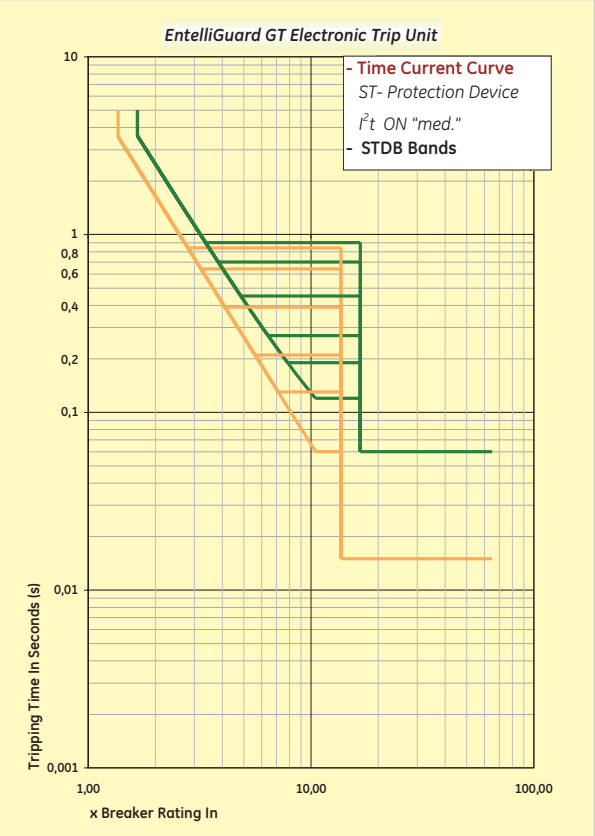

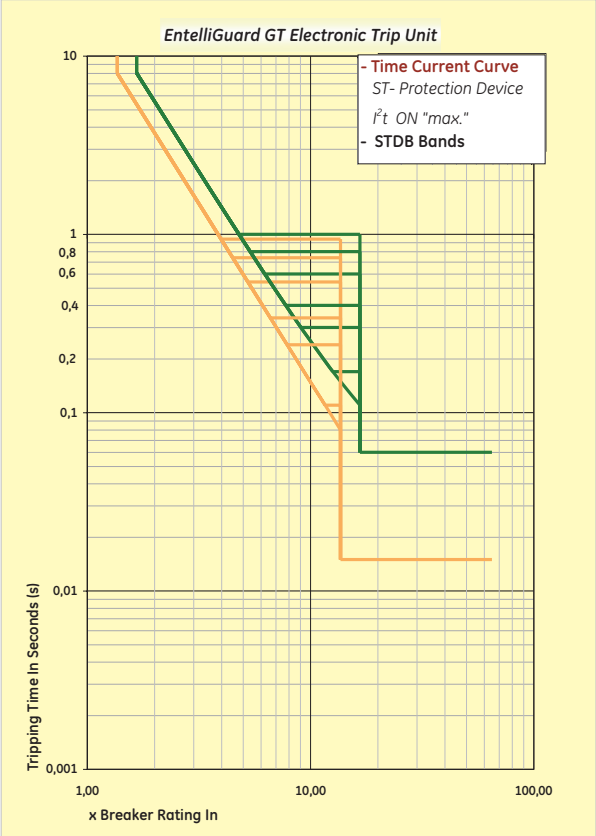

Standard on | GT-E | GT-S | GT-N | GT-H

(1) When the LT Fuse band option is selected (22 F Bands) the I²T slope functions of this device are disabled

Short-circuit Protection; Instantaneous (I)

Instantaneous Short-circuit (I) Protection
A user settable device that allows a high speed fault interruption at a pre-determined current level. This device can be used with the short time delayed (ST) Short-circuit protection device or as replacement thereof. The device has a current adjustment of 2 to 15 (±10%) times the chosen Primary Current Value (Ie) in steps of 0.5.
The device can also be switched OFF.
On breakers with a rating of more than 4000A the maximum setting of 15 x is in some cases limited to a lower value due to the breaker current rating and its Short-circuit withstand value (see page B.11).
The Instantaneous tripping system used in the EntelliGuard™ Electronic Trip Unit has a unique programming feature that waits for the downstream device to trip before reacting to an overcurrent fault. This providing the user with a unique combination of **Speed** and **Selectivity**.

The graph indicates the Maximum interruption time and non tripping time across the full current setting band and the transition to the HSIOC protection device (see page B.11).

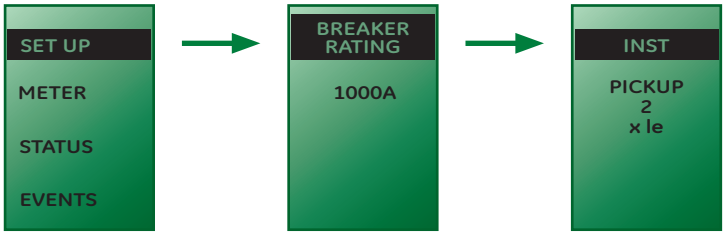

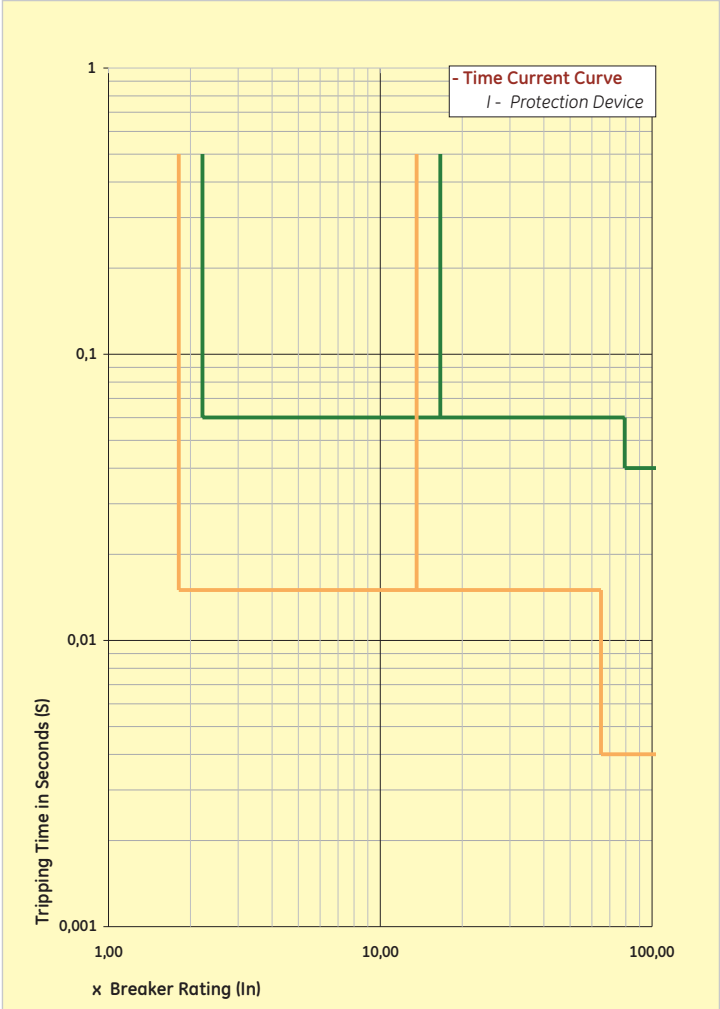

Unelec Equipment
www.unelec-equipment.com
Tel: +1 319 244 84 69 UeeS Co. Tel: +1 650 466 86 39
Info@unelec-equipment.com

Standard on | GT-S | GT-N | GT-H

Short-circuit Protection; Instantaneous (I)

Extended Range Instantaneous Protection
Derived from, and based on the same principles as the standard Instantaneous protection but with and extended current adjustment range.
This high-level instantaneous device extends the standard range from 2 - 15 to 2 - 30 (±10%) times the chosen Primary Current Value (Ie). Until 15 x Ie in steps of 0.5 and for the extended setting (above 15 x Ie) in steps of 1. The device can also be switched OFF.
On breakers with a rating of more than 2000A the maximum setting of 30 x is in some cases limited to a lower value due to the breaker current rating and its Short-circuit withstand value (see page B.11).
As with the standard Instantaneous tripping system the device has a unique programming feature that waits for the downstream device to trip before reacting to an overcurrent fault. This providing the user with a unique combination of **Speed** and **Selectivity**.

The graph indicates the Maximum interruption time and non tripping time across the full current setting band and the transition to the HSIOC protection device (see page B.11).

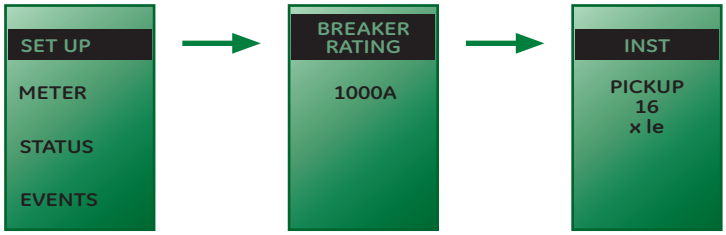

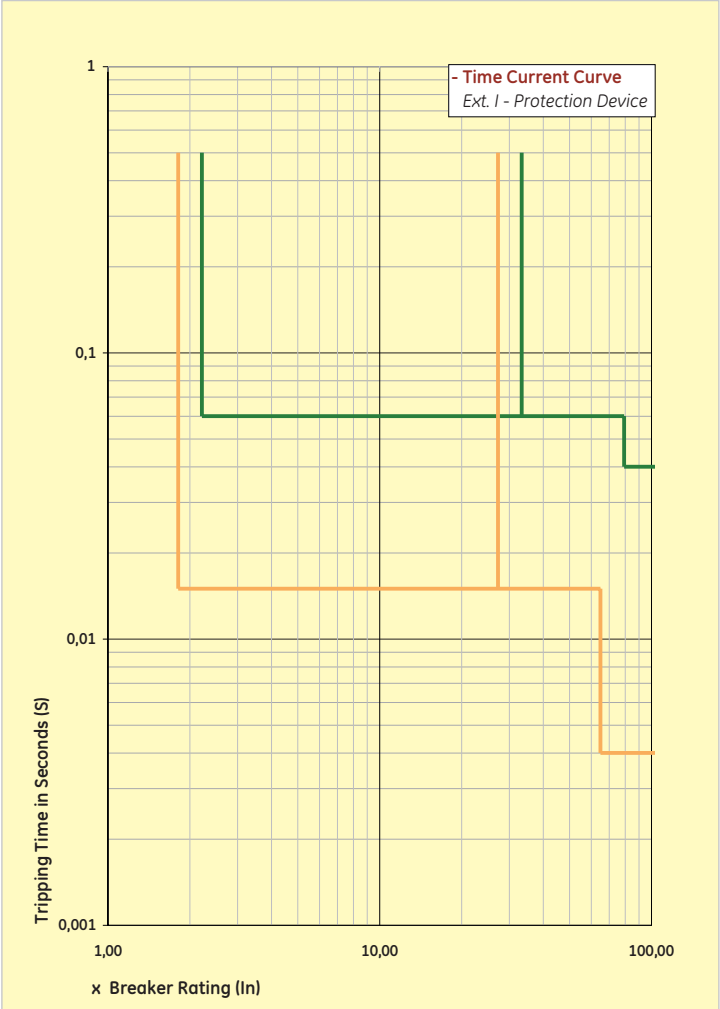

Unelec Equipment
www.unelec-equipment.com
Tel: +1 319 244 84 69 UeeS Co. Tel: +1 650 466 86 39
Info@unelec-equipment.com

Optional on | GT-S | GT-N | GT-H

Short-circuit Protection temporary reduced I (RELT)

Temporary reduced setting of Instantaneous Short-circuit Device (RELT)
When a Short-circuit event takes place, large amount of electrical energy is released that can be hazardous to users in the direct vicinity of such an occurrence.
Reducing the levels of arc flash incident energy during such events is possible by limiting both the events current level and time span.
The EntelliGuard™ G Electronic Trip Unit can be equipped with a device that temporarily limits both the events current level and time span: **RELT**

The RELT device can be turned ON by accessing input one of the trip unit [1]. When the device is switched ON Relay output one [1] changes position and reverts to it's standard position when RELT is OFF.
The RELT device can be adjusted from 1.5 to 15 (±10%) times the Chosen Primary Current Value (Ie) in steps of 0.5 (pick up setting). The device will trip the breaker within 50 Milliseconds.

The graph indicates the Maximum interruption time and non tripping time across the full current setting band and the transition to the HSIOC protection device (see page B.11). Information on how to set this device can be found in IEEE standard 1548.

(1) See section on electronic inputs and Relay ouputs on page B.17

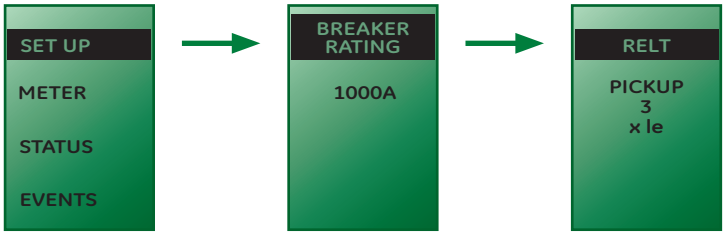

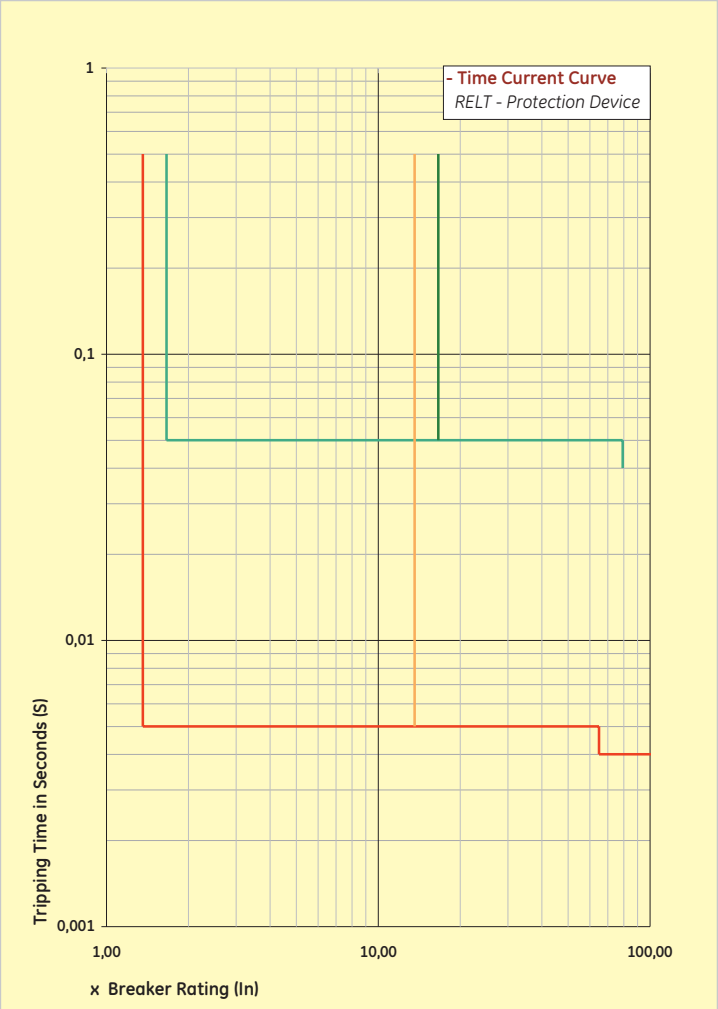

Unelec Equipment
www.unelec-equipment.com
Tel: +1 319 244 84 69 UeeS Co. Tel: +1 650 466 86 39
Info@unelec-equipment.com

Standard on | GT-S | GT-N | GT-H

Setting limitations of Short-circuit devices
Short-circuit Protection: HSIOC, MCR

Setting Limitations of Short-circuit devices.
To prevent damage to the EntelliGuard™ breaker due to currents that exceed its design parameters, the maximum setting values of the ST & I devices are in some cases limited to a lower level.

These values are indicated in the adjacent table.

Breaker Rating In	Primary setting current Ie	Breaker Icw rating				
		42kA	50kA	65kA	85kA	100kA
		Maximum ST setting (x Ir)				
5000A	5000A				10x	10x
6400A	6400A				10x	10x
		Maximum I or Ext. I setting (x Ie)[1]				
1600A	1600A	15X				
2000A	2000A		24x	30x	30x	30x
2500A	2500A			25x	30x	30x
3200A	3200A			19x	25x	30x
4000A	4000A			15x	20x	24x
5000A	5000A				15x	19x
6400A	6400A				13x	15x

Breaker type is not available

HSIOC Protection device
To prevent very high level Short-circuit currents causing damage to their electrical installation and their components EntelliGuard™ Power Circuit Breaker are equipped with a HSIOC protection device.

This high-level Short-circuit device is installed in all EntelliGuard™ Breakers and is designed to trip the breaker at the specified Icw value of the device[3]. The device interrupts and thus limits the duration of these high level Short-circuits to 40 Milliseconds.

The HSIOC device is normally set at a value that is slightly higher than the specified 1 second Icw of the breaker in which it is installed. This to warranty selectivity at the specified 1 second level taking system tolerances into account[2].

Overview of installed HSIOC devices in Automatic types:		Set value (rms)
Envelope T		
	GT04R to GT16R	43000A
	GT04K to GT16K	51500A
Envelope 1		
	GG04S to GG20S	50000 A
	GG04N to GG20N	65000 A
	GG04H to GG20H	65000 A
Envelope 2		
	GG25N to GG40N	65000 A
	GH32N & GH40N	65000 A
	GG04E to GG20E	85000 A
	GG25H to GG40H	85000 A
	GH32H & GH40H	85000 A
	GH32M & GH40M	85000 A
Envelope 3		
	GG32G to GG40G	100000 A
	GG40M to GG64M	100000 A
	GG40L to GG64L	100000 A

Making Current (MCR) Protection device
If a breaker is closed onto a Short-circuit current it is mandatory that the device interrupts before the electrical installation and its components incur any damage.

An MCR device is present in all EntelliGuard™ Power Circuit Breakers[3] specifically designed to trip the breaker when closing onto a fault.

Overview of installed MCR devices in Automatic types:		Set value (rms)
Envelope T		
	GT04R to GT16R	32800A
	GT04K to GT16K	32800A
Envelope 1		
	GG04S to GG20S	42000 A
	GG04N to GG20N	50000 A
	GG04H to GG20H	65000 A
Envelope 2		
	GG25N to GG40N	65000 A
	GH32N & GH40N	65000 A
	GG04E to GG20E	85000 A
	GG25H to GG40H	85000 A
	GH32H & GH40H	85000 A
	GH32M & GH40M	85000 A
Envelope 3		
	GG32G to GG40G	100000 A
	GG40M to GG64M	100000 A
	GG40L to GG64L	100000 A

Overview of installed MCR devices in Non Automatic types:		Set value (rms)
Envelope T		
	G704R to G716R	32800A
Envelope 1		
	GW04N to GW20N	65000 A
Envelope 2		
	GW04M to GW40M	85000 A
	GZ32H & GZ40H	85000 A
Envelope 3		
	GJ40L to GJ64L	100000 A

(1) If the Short Time Device (ST) is turned OFF the highest instantaneous or extended instantaneous setting is reduced to 15 x Ie for all types ≤ 4000A and to 10 x Ie for the 5000 and 6400A types
(2) If the breaker is not equipped with an Instantaneous protection device (I or Hi) or in cases where device is set to off the HSIOC device current threshold is automatically reduced by 10%
(3) Only included in selected NON Automatic types

Unelec Equipment
www.unelec-equipment.com
Tel: +1 319 244 84 69 UeeS Co. Tel: +1 650 466 86 39
Info@unelec-equipment.com

Ground fault Protection

Ground Fault Protection (GFsum)

To protect an installation or a part thereof against indirect contact, Protection Devices can be used to automatically disconnect the power supply when a fault to earth is detected. The HD384 installation standard requires that the mentioned device senses the fault and then interrupts the supply within a specified time frame.

A Short-circuit device as an EntelliGuard™ Power Circuit Breaker can be used to meet this requirement. However these Short-circuit Protection devices are normally set at values that are too high to detect normally occurring faults to Earth.

The optionally available Ground Fault protection feature is specifically designed to detect lower currents than a standard Short-circuit Device and operate by residually summing the current in the Phases and Neutral. When a fault to Earth creates an unbalance in the system the resulting Fault Current is detected by the device that produces an alarm signal or trips the associated Circuit breaker thus disconnecting the circuit.

The EntelliGuard™ Ground fault device has an adjustment range of 0.2 to 1[1] (±15%) times the chosen breaker rating (In) and can be set in steps of 0.01 (pick up setting). To allow selectivity with other downstream Protection Devices there are 14 different time band settings available.

The graph indicates a number of the available 14 time bands across the full adjustment range. The table contains the minimum delay time and the maximum total interruption times for all time band settings.

The Ground fault device must monitor the current in all Phases and the Neutral. When a 3 pole device is used in a 4 wire (3phase + Neutral) system a 4th sensor must be placed in the Neutral[2]. On use of a 4 pole EntelliGuard™ breaker the sensor is already present in the Neutral pole.

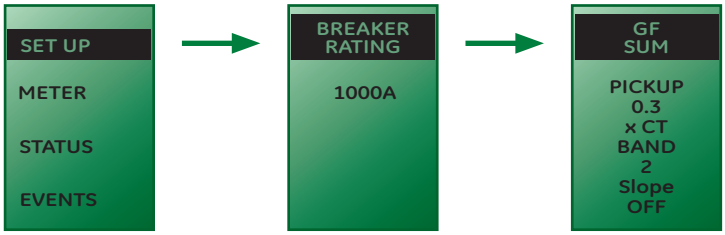

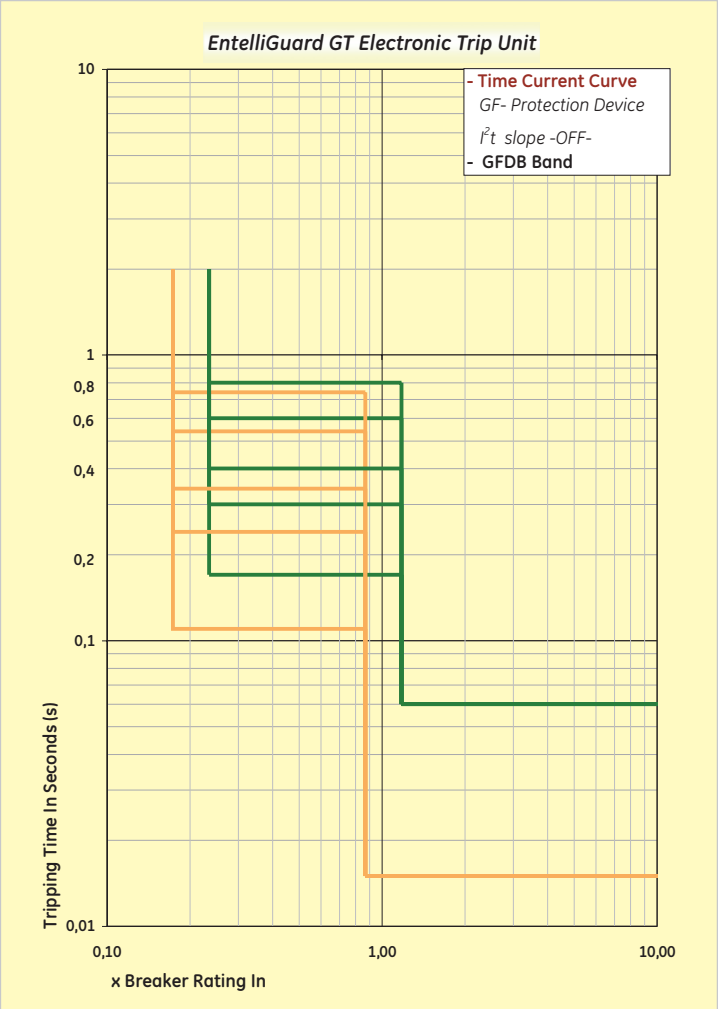

Ground Fault tripping times at indicated levels per selected GFDB band -I²t slope OFF, in Milliseconds

	x Ir	1	2	3	4	5	6	7	8	9	10	11	12	13	14
0.2 x	*Tripping*	110	120	140	170	190	240	270	340	400	450	600	700	800	900
±10%	*Non Tripping*	50	60	80	110	130	180	210	280	340	390	540	640	740	840
0.6 x	*Tripping*	110	120	140	170	190	240	270	340	400	450	600	700	800	900
±10%	*Non Tripping*	50	60	80	110	130	180	210	280	340	390	540	640	740	840

(1) When an auxiliary supply is connected (24V DC) an extra setting range of 0.1 to 0.2 becomes available.
(2) Use a Rogowksi coil of the appropriate rating, distance to breaker limited to 10 meters.

Ground fault Protection

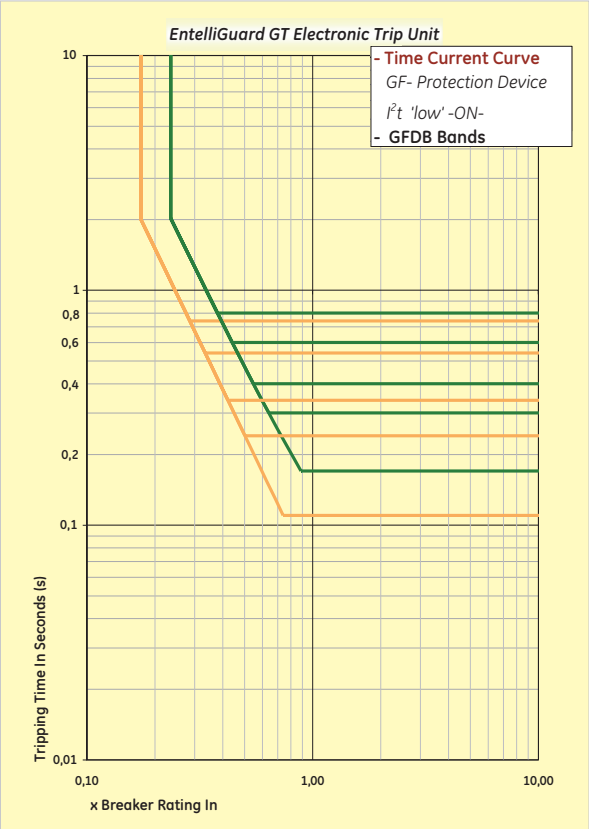

Ground Fault Protection I²T Bands (slope)

The GF device can also be set to a slope value. The available multiple I²t slopes are normally used to achieve selectivity with downstream fuses or to improve selectivity with downstream circuit breakers.

The user has the possibility to choose a current adjustment of 0.2 to 1[1] times the chosen breaker rating (In) in steps of 0.01 (pick up setting) and one of 14 time bands.

The three graphs depict the available I²t slopes (Set at positon Low, Med. or High) and their intersection with several of the available 14 time bands across the full adjustment range.

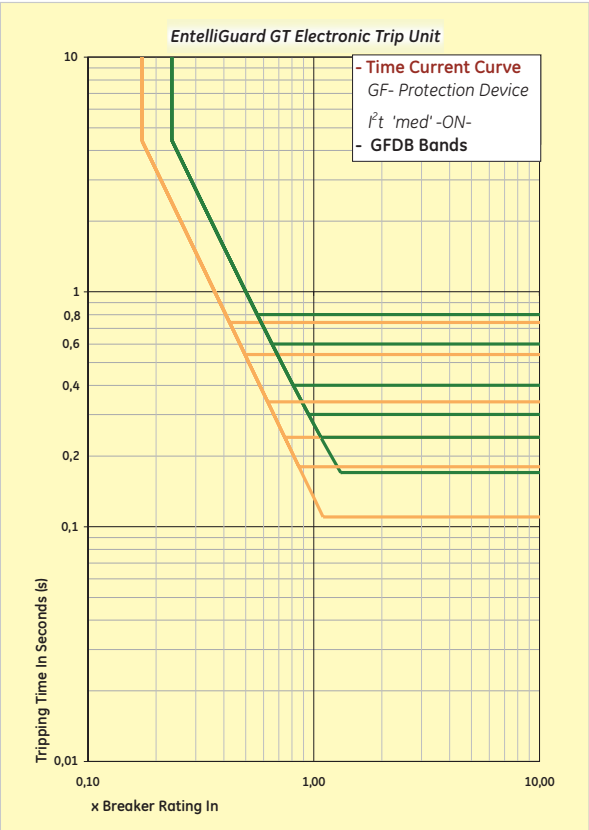

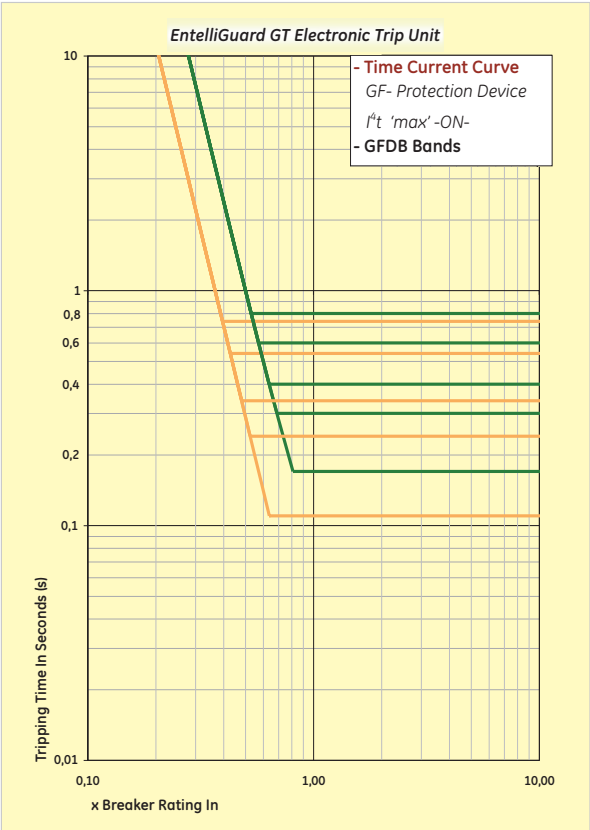

Optional on | GT-E | GT-S | GT-N | GT-H

(1) When an auxiliary supply is connected (24V DC) an extra setting range of 0.1 to 0.2 becomes available

Ground fault Protection

Ground Fault Protection (GF CT)
Optionally the EntelliGuard™ Electronic Trip unit can be used with an alternative groundfault protection scheme in which the Neutral to Earth Current is measured by an 'Earthleakage Leg Sensor' placed in the Neutral and Earth link of the system.

This option requires the use of an auxiliary supply of 24VDC and the Electronic Trip Unit needs to be set to the option CT input. An Earth leg C needs to be placed in the near vicinity of the break[1] and an interposing CT needs to be mounted in breaker. When the sensor detects a fault current the EntelliGuard™ trip trips the associated Circuit breaker thus disconnecting the circuit or optionally, produces an alarm signal.

The EntelliGuard™ device has an adjustment range of 0.2 to 1[2] (+-15%) times the chosen breaker rating (In) and can be set in steps of 0.01 (pick up setting).
To allow selectivity with other downstream Protection Devices there are 14 different time band settings available and three I^2T slope settings (Same setting data and curves apply as on the standard GF residual (sum) protection).

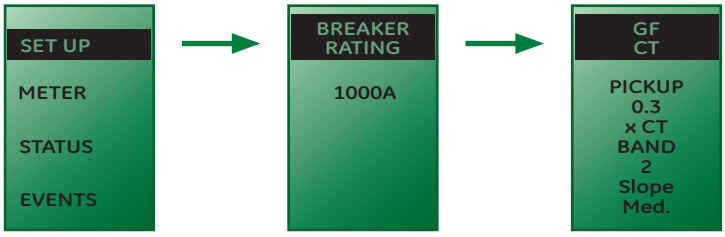

4 Wire system

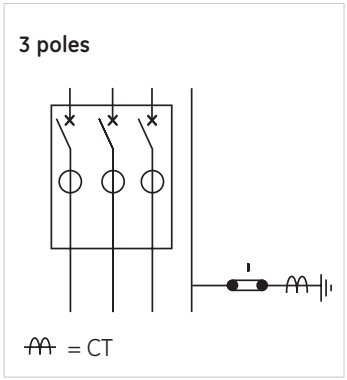

4 Wire system

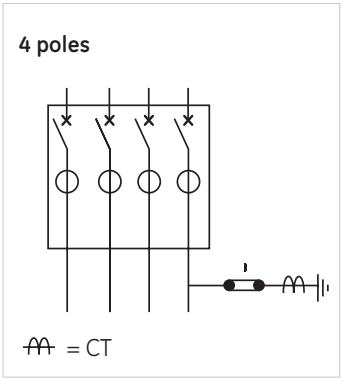

Optional on — GT-H

Dual Groundfault Protection
(Residual or Sum & Source Ground Return or CT)
The EntelliGuard™ Electronic Trip Unit allows the user to combine the functionality of both the GF sum and GF CT systems thus creating a sophisticated Dual Ground Fault protection system.

Based on the chosen breaker configuration and the network configuration in which the device is used devices as indicated in the adjacent table are required. In all configurations a breaker mounted interposing current transformer is required. It is supplied as a part of the standard factory mounted assembly.

A variant of the Dual Ground Fault Protection system, trip unit types allowing Unrestricted, Restricted and Standby Earthfault protection is also available

These GT-HE trip units have an option allowing the user to choose between:
UEF, UEF+REF, UEF+SEF, UEF+SEF+REF or SEF + REF

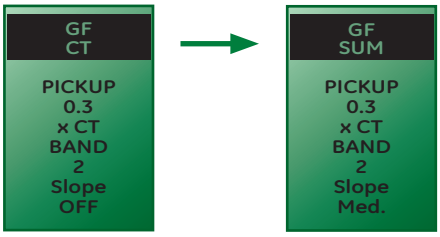

Network	EntelliGuard™ nr. of Poles	GF Residual (SUM)	GF Source Return (CT)	GF sum PLUS GF CT
3 wire (3 phase)	3		4th CT Int. CT	4th CT Int. CT
4 wire (3 phase + Neutral)	3	4th Rg	4th CT Int. CT	4th CT Int. CT 4th Rg
	4		4th CT Int. CT	4th CT Int. CT

Unelec Equipment
www.unelec-equipment.com
Tel: +1 319 244 84 69 UeeS Co. Tel: +1 650 466 86 39
Info@unelec-equipment.com

Optional on — GT-H

(1) Distance to breaker limited to 50 meters
(2) When an auxiliary supply is connected (24V DC) an extra setting range of 0.1 to 0.2 becomes available

Zone Selective Interlock, Load Shedding and Trip Indication

Zone Selective Interlock
Load Shedding Function
Trip Reason Indicators (Event Logging) & Trip Operation counter (Data acquisition package)

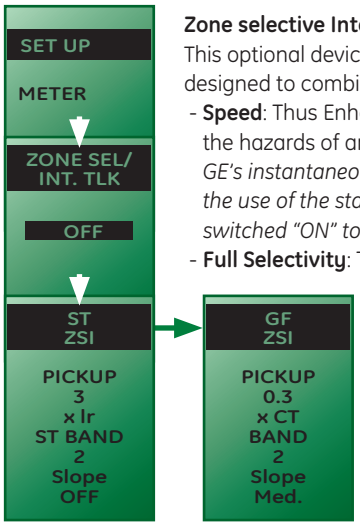

Zone selective Interlock (ZSI)
This optional device has been specifically designed to combine:

- **Speed**: Thus Enhancing Safety by reducing the hazards of arc flash incident energy. *GE's instantaneous ZSI (Arcwatch™) allows the use of the standard instantaneous switched "ON" to achieve **Speed**.*
- **Full Selectivity**: Thus Enhancing Reliability. *GE's instantaneous ZSI (Arcwatch™) allows for **full selectivity** without switching the standard instantaneous device "OFF"*

ArcWatch™ enabled solutions resolve the contradiction between the speed required for safety puroposes (Arc Flash Incidents) and the timing required for full selectivity.

It requires one or two simple 2 core wire to connect the ZSI inputs and outputs between two or more Electronic Trip Units.

If a breaker detects a fault it will send a signal to the upstream breaker to move its present time setting to another predefined higher level. If the Short-circuit protection device has NO time setting band (Instantaneous), it simply gets a signal to wait another 5 half cycles before tripping. The breaker that originally detects the faults only trips after transmitting the indicated signals.
The EntelliGuard™ Electronic Trip Unit uniquely offers this function on the following protection devices:

Time delayed Short-circuit Protection (ST..STDB)
Standard and Source Return Ground Fault protection (GF, GFDB)
Instantaneous (I_i and I_{hi})

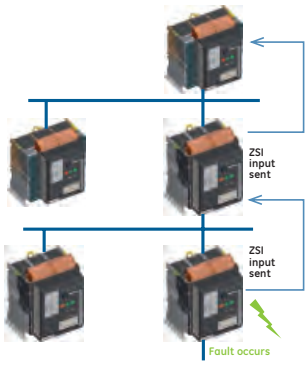

When a ZSI input is received the breaker changes its time band from the standard device setting to the ZSI setting. Both of these settings are user definable and can be set independently.

Optional on — GT-S — GT-N — GT-H

Load shedding alarm output
The load shedding device has been designed to allow the user to switch off NON priority loads before the LT functions trips the breaker due to an overload.

It can also be used to verify the current consumption in the circuit which the EntelliGuard™ breaker protects. This to verify that the current running in the circuit does not exceed a certain pre-determined value.

The device monitors the current in the circuit and provides an alarm signal if the load in one phase of the protected circuit exceeds a pre-defined value. The associated channel can be set ON or OFF and be adjusted in current values from 0.5 to 1 x the breaker rating In) in steps of 0.05.

When the highest measured phase current exceeds the 'ON' value set for longer than 60 seconds an output is provided to indicate that 'load shedding' may prevent an overload tripping event. When the highest measured phase current drops below the 'OFF' setting for longer than 60 seconds, the output is stopped[1].

Optional on — GT-S — GT-N — GT-E — GT-H

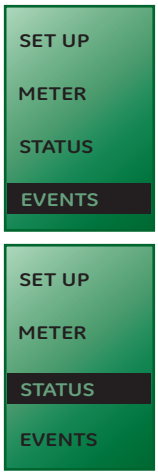

Trip Reason Indicators (event logging)
Trip Operations counter
The Electronic Trip Unit keeps track of data indicating why the associated breaker has tripped and on how may occurrences have taken place. Accessible under the '**EVENTS**' menu the Trip Reason Indicator keeps track of a maximum of 10 events that have caused the EntelliGuard™ breaker to trip. The device stores the voltage, the phase's involved, the current value, the reason of the trip and the trip number (see counter). When an auxiliary voltage is connected, the time and date of the event are also stored. The Trip Reason Indicator registers events for the following devices.

Overcurrent (LT, ST, I GF)
Relaying Functions (see page B.13)
Shunt or Undervoltage Release (If the associated contacts are connected via the trip unit)

Accessible under the '**STATUS**' menu the Trip Operations Counter registers a maximum of 255 overcurrent faults with their reason (LT, ST, I or GF-EF). The data can be viewed and reset through the STATUS menu Pickup Status option.

Optional on — GT-E — GT-S — GT-N — GT-H

(1) See section on Relay Outputs on page B.18

Measurement Functions and Power Supplies

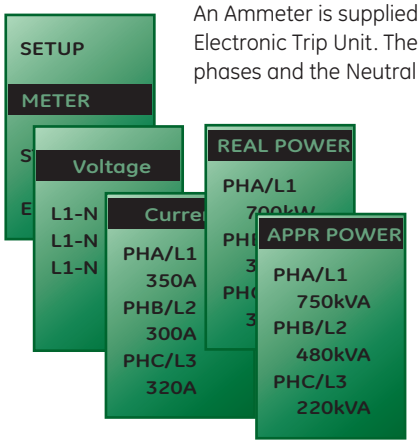

An Ammeter is supplied with each EntelliGuard™ Electronic Trip Unit. The current in each of the three phases and the Neutral can be viewed.

The device has an accuracy of 2% when viewed at the nominal current of the breaker and an accuracy of 5% when viewed when the breaker is running at 50 - 85% of its full load.

Parameter	Measured	Units	Resolution	Accuracy at 100% of breaker rating
Current	L1, L2, L3, N	A	0000	2%

Standard on — GT-E — GT-S — GT-N — GT-H

Full Measurement Package

GT-N & GT-H type Electronic Trip Units have an advanced measurement facility that provides the user with a comprehensive overview of all relevant electrical parameters and their values. The adjacent table indicates the available parameters, the units used and their accuracy.

When the option for display (Meter) is opened, a calculation is initiated that calculates each value based on a one second time frame.

The device also calculates the sum of the used power in kWh, KVAh and KVArh as a total for all 3 phases. These values are kept and re-calculated every second. The Electronic Trip Unit has an option to allow these summations to be reset.

Based on the same one second calculation method, a Power demand value is determined for Real (KW), Apparent (KVA) and Reactive (KVAR) power. If the Power supply has a neutral the values are calculated per phase and as a total of all three phases.

A Peak Power Demand calculation is available for Real Power(KW) only. Here the data is stored and when necessary renewed at a user definable pre-set time interval.
When the new Peak Demand value exceeds the previous stored value the new value replaces the old in Memory.
The Electronic Trip Unit has an option to reset this value.

Parameter	Measured	Units	Resolution	Accuracy at 100% of breaker rating
Current	L1, L2, L3, N	A	0000	2%
Voltage	L1, L2, L3	V	0000	2%
Power Factor	L1, L2, L3	%	00	4%
Frequency	L1, L2, L3, N	Hz	00	1 cycle
Apparent Power	L1, L2, L3	kVA	000.000	4%
Real Power	L1, L2, L3	kW	000.000	4%
Reactive Power	L1, L2, L3	KVAr	000.000	4%
Average Power demand	L1, L2, L3	kVA	000.000	4%
	L1, L2, L3	kW	000.000	4%
	L1, L2, L3	KVAr	000.000	4%
Energy	L1, L2, L3	KWh	000.000	4%
Peak Power Demand	L1, L2, L3	KW	000.000	4%

Standard on — GT-N — GT-H

Power Conditioners and Auxiliary Power Supply

To use the above mentioned comprehensive measurement facilities, it is necessary to track the 3phase and Neutral network voltages and to input these values into the Electronic Trip Unit. For this purpose the EntelliGuard™ line includes a number of 'Power Conditioners' that transform and condition a standard network power supply to a signal that the trip unit can safely use and read. When optioning the measurement facility for the 1st time, the Electronic Trip Unit will require the user to set the primary voltage values.

A number of advanced Trip Unit options require an auxiliary supply of 24V DC. A unit that transforms and conditions a standard network power supply to 24V DC is available for this purpose. The auxiliary supply also improves the speed of the trip unit setup function at low circuit loads (<20%) and when no standard power supply is present.
A separately available Test Box Kit can also be used as a temporary power supply.
This device has a battery pack and includes a 24 V DC auxiliary power supply.

Accessory for — GT-S — GT-N — GT-H

Unelec Equipment
www.unelec-equipment.com
Tel: +1 319 244 84 69 UeeS Co. Tel: +1 650 466 86 39
Info@unelec-equipment.com

Protective Relaying Functions; Relay and Trip Unit Inputs Wave Form Capture Option

SET UP
METER
STATUS
EVENTS

Protective Relaying Functions
The GT-H Electronic trip unit has five protective relay functions. These can be switched ON or OFF and when active produce an alarm signal that is added to the Event Log and transmitted through the communication bus. Each relay function can be configured to trip the breaker or/ and to send an alarm signal via a Relay Output.

Protective Relay	Adjustability	Steps	Accur.	Trips Breaker
Overvoltage	110% -115% of line voltage	1%	2%	ON or OFF
Overvoltage Delay	1 to 15 seconds	1sec	± 0.1 s	
Undervoltage	30% - 85% of line voltage	1%	2%	ON or OFF
Undervoltage Delay	1 to 15 seconds	1sec	± 0.1 s	
Voltage Unbalance	10% -50% difference between highest & lowest phase when compared to average	1%	2%	ON or OFF
Voltage Unbal. Delay	1 to 15 seconds	1sec	± 0.1 s	
Power Direc. Reversal	Line- to-Load OR Load to Line			ON or OFF
Power Reversal setting	From 10 to 990kW	10kW	2%	
Current Unbalance	10% -50% difference between highest & lowest phase when compared to average	1%	2%	ON or OFF
Current Unbal. Delay	1 to 15 seconds	1sec	± 0.1 s	

Standard on — GT-H

SET UP
METER
STATUS
EVENTS

Relay Outputs
There are two programmable relay outputs available rated at 1A 30V AC or DC. The first is dedicated to the Reduced Instantaneous Device whilst the second can be assigned to single functions, a group of functions or to the protective relays functions mentioned above. Accessible under the '**SETUP**' the output is wired out through the secondary terminals of the breaker as indicated on page E.7.

Relay Output Reset (Group 1, 4, 5 & 6)
If the reason of the contact closure is removed the contact will re-open. This typically occurring when a health status warning is produced or when a current alarm drops below it's threshold. If the breaker trips whilst the relay contacts are activated the contacts will be reset and revert to their original open position.

Relay Output reset (Group 2, 3, & 8)
If a 24 V DC power supply is present and the event associated with the relay closure causes the breaker to trip the contacts will not change position. A breaker re-set & re-closure will reset the contacts to their original open position.

Function	Group
GF Alarm[1]	Assigned to group 1
Over-current Trips (LT, ST, INST, GF)	Assigned to group 2
Protective Relays	Assigned to group 3
Current Alarm 1	Assigned to group 4
Current Alarm 2	Assigned to group 5
Health status	Assigned to group 6
GF Alarm and GF trip indication	Assigned to group 8

(1) Only works when a trip unit has the Ground fault alarm installed (GFA).

Standard on — GT-N — GT-H

SET UP
METER
STATUS
EVENTS

Electronic Trip unit INPUTS
There is a total of 2 programmable inputs available. The first is dedicated to switch the Reduced Instantaneous ON. The second can be used to trip the breaker. The inputs are suitable for voltages up to 24V AC or 30V DC. Accessible under the 'SETUP' the outputs are wired out through the secondary terminals of the breaker as indicated on page E.7.

Standard on — GT-N — GT-H

SET UP
METER
STATUS
EVENTS

Wave Form Capture option
When a fault has taken place, it can be of importance to visualize the event. The Wave form Capture option included in the GT-H type Electronic Trip Unit can track and visualize any fault event. The device tracks 8 cycles, 4 before and 4 after the event with resolution of 48 samples per cycle at 50Hz and stores the results in memory. It registers events in all three phases and the Neutral. After the event, the waveform event is stored and can be accessed by using the waveform client module of the Enervista software. When the upload into this software is complete, the Trip Unit will reset this function and be available to register the next event. The EntelliGuard Manager Toolkit software can also be used to access the Waveform capture feature.

Standard on — GT-H

Unelec Equipment
www.unelec-equipment.com
Tel: +1 319 244 84 69 UeeS Co. Tel: +1 650 466 86 39
Info@unelec-equipment.com

Communications
Neutral protection, Reset Choice, Rating Plug and Test Kit

Communications
A number of the GT Electronic trip unit types can be optioned to allow the Breaker & Trip Unit combination to communicate data bi-directionally through Modbus or Profibus. The communication option needs a 24 V auxiliary voltage input capable of supplying 90mA for the Modbus option and 240mA for the Profibus option.

For Envelope T, the Modbus and Profibus need to be connected with the communication modular for operation. In Envelope 1/2/3, Modbus and Profibus can be directly connected to the Trip Unit without the use of any interfaces. In combinatioin with communications the use of the specifically designed Command Closing Coil and auxiliary contacts with signal ratings are required.

Trip unit parameters as over current settings, protective relay functions, alarm settings etc. can be accessed through communications. A locking password is provided that prevents unauthorized changes through communication or the keypad.

The Modbus variant is fully compliant with the Modbus Protocol and uses 2 a wire 485 connection. The device is configured to stay on one fixed baud rate, or to cycle through the baud rates until communication is established. The link host can operate at baud rates between 300 and 19.200.

The Profibus protocol is integrated in specific models of the GT-H Trip Unit and uses a four wire RS 485 connection. Profibus DP is supported in A-Cyclic and Cyclic mode. For the cyclic mode the associated gsd file is available on request.

A communication register can be supplied for both versions.

Optional on | GT-S | GT-N | GT-H

Neutral Protection
When inserted into a 4 pole breaker the EntelliGuard™ Electronic Trip Unit senses that the breaker in which the device is installed has a Neutral Pole. Via the set Up menu, a Neutral Setting option then becomes available in which the LT, ST and I protection device can be jointly set to one of the following values:

0%, 50%, 63% or 100%. x the values set for the phase protection device.

Standard on | GT-E | GT-S | GT-N | GT-H

Reset Choice Function
When a fault has occurred the Trip Unit trips the associated breaker. It is then deemed normal installation practise to verify the reason of the fault before reconnecting power by resetting and switching the breaker on. The advanced options included in the EntelliGuard™ Trip Unit provide the user with the fault reason, magnitude and location, thus allowing the user to easily establish the required corrective actions. To follow this procedure Trip Unit reset function should be set to MANUAL.

However, in some cases it is required that the breaker resets itself automatically. If this functionality is required, the reset function should be set to AUTOMATIC. Or if the reset function needs to be controlled from remote location, the selector switch on the trip unit front shall be chosen to manual reset mode, and the remote reset coil is required together for functionality.
A selector switch on the Trip Unit front face allows the user this choice.

Standard on | GT-E | GT-S | GT-N | GT-H

Full Range Rating Plug
Each EntelliGuard™ Electronic Trip Unit must be equipped with a separately available Rating Plug to allow it to function correctly. The Full Range Rating Plug is plugged in to a jack on the trip Unit Front Face. When this device is not installed, the Trip Unit will revert to its minimum setting, which has as value of 16-18% of the breaker rating In.

Accessory for | GT-E | GT-S | GT-N | GT-H

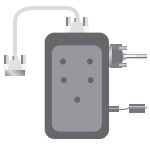

Test and Set-Up Kit
To verify that the Electronic Trip Unit is interfacing correctly with the Breaker and to establish if the circuitry in the Trip Unit is functioning correctly, a test kit is available. The device has a battery pack and a 24V auxiliary supply to allow its use in a secondary function as power supply of the Trip unit.
The device can be plugged into a jack on the trip Unit Front face. Optional are one of the EntelliGuard Manager Toolkit Packages. The **TKB** variant allows the user to Monitor, Set the user to Monitor, Set and Customize the data in in the memory of the EntelliGuard trip units.
Downloadable from our website:
United Kingdom : www.ge.com/uk/industrialsolutions
Middle East: www.ge.com/ex/industrialsolutions
The **TKS** variant supplied with the GTUKT20S adds a comprehensive TEST functionality covering the functionality of all protective devices (timing and current values) and all installed features.

Accessory for | GT-E | GT-S | GT-N | GT-H

Overview of GT Electronic Trip Unit Functionality

			GT-E	GT-S	GT-N	GT-H	Remarks
Setting Interface		LCD Screen allowing access to 4 distinct Menu's	X	X	X	X	--
		Touch pad adjustments	X	X	X	X	--
		Multilingual	X	X	X	X	--
		Adjustable Manual or Automatic RESET option	X	X	X	X	--
Long Time or Overload Current Protection		6 primary current settings with FULL RANGE Rating Plug **1; 0.975; 0.9625; 0.95; 0.45 & 0.4** x Breaker rating In	X	X	X	X	--
		11 secondary current settings Ir **1; 0.95; 0.9; 0.85; 0.8; 0.75; 0.7; 0.65; 0.6; 0.55; 0.5** x Primary setting Ie	X	X	X	X	--
		Resulting setting Range **0.2 to 1** with **66** set points	X	X	X	X	--
		Possibility to Switch **OFF**	-	-	-	X	--
		22 Thermal Protection (C type) time bands available Ranging from class 0.5 to 40 (bands at 7.2 x Ir)	X	X	X	X	--
		22 F type (fuse) time bands available	-	-	-	X	--
		13 standard inverse shape protection bands available (L = 0.5-20)	-	-	-	X	--
		13 very inverse shape protection bands available (L = 0.5-20)	-	-	-	X	--
		13 extremely inverse shape protection bands available (L = 0.5-20)	-	-	-	X	--
		Neutral Protection 0-50%-63%-100%	X	X	X	X	--
		Cooling function and Thermal memory	X	X	X	X	--
Short Time Short-circuit Current Protection		Setting RANGE from **1.5 to 12** x Ir (LT setting)	X	X	X	X	--
		Steps of 0.5 (A total of 22 settings)	X	X	X	X	--
		Possibility to Switch **OFF**	-	-	-	X	--
		17 Time delay settings **(STDB)** ranging from 30 to 940 Milliseconds delay setting result in a 90 to 1000 Milliseconds Clearing time	X	X	X	X	--
		Clearance times to IEC 40979-1 and IEC 60364	X	X	X	X	--
		3 I^2t Protection time bands available	X	X	X	X	--
Instantaneous Short-circuit Current Protection	Standard	I_i Setting RANGE from **2 to 15** x Ie (Primary Setting)	-	X	X	X	--
		Steps of 0.5 (A total of 28 settings)	-	X	X	X	--
		Possibility to Switch **OFF**	-	X	X	X	--
		Selective Execution	-	X	X	X	--
		Fixed Instantaneous or HSIOC protection	X	X	X	X	--
	Extended range	I_{hi} Setting RANGE from **2 to 30** x Ie (Primary Setting)	-	O	O	O	--
		2-15 Steps of 0.5; 15-30x steps of 1 (A total of 43 settings)	-	O	O	O	--
		Possibility to Switch **OFF**	-	O	O	O	--
		Selective Execution	-	O	O	O	--
		Fixed Instantaneous or HSIOC protection	X	X	X	X	--
	Reduced	I_i Setting RANGE from **1.5 to 15** x Ie (Primary Setting)	-	X	X	X	--
		Steps of 0.5 (A total of 29 settings)	-	X	X	X	--
		Possibility to Switch **OFF**	-	-	X	X	--
		Remote and Local ON and OFF with position indication signal	-	X	X	X	--
Ground or Earth Fault Protection		Setting RANGE from **0.1 to 1** x In (Breaker Rating)[1]	O	O	O	O	--
		Steps of 0.01 (A total of 92 settings)	O	O	O	O	--
		Possibility to Switch **OFF**	-	-	-	O	--
		14 Time delay settings **(GFDB)** ranging from 50 to 840 Milliseconds delay setting resulting in a 110 to 900 Milliseconds Clearing time	O	O	O	O	--
		Clearance times to IEC 40979-1 and IEC 60364	O	O	O	O	--
		3 I^2t Protection time bands available	O	O	O	O	--
		Residual Principle	O	O	O	O	--
		Source Ground Return Principle	-	-	-	O	N
		UEF, REF and SEF applications possible	-	-	-	O	N
		Combinations of UEF, REF and SEF applications possible	-	-	-	O	N
Measurement package		Current (L1, L2, L3, N)	X	X	X	X	--
		Voltage (L1, L2, L3)	-	-	X	X	C
		Energy (kWh) Total Real	-	-	X	X	C
		Real Power (L1, L2, L3, total)	-	-	X	X	C
		Apparent Power (L1, L2, L3, total)	-	-	X	X	C
		Reactive Power (L1, L2, L3, Total)	-	-	X	X	C
		Total Power (L1, L2, L3, total)	-	-	X	X	C
		Power (kW) Peak (total)	-	-	X	X	C
		Demand Power (kW) (total)	-	-	X	X	C
		Frequency (L1, L2, L3)	-	-	X	X	--
Protective Relaying		Voltage Unbalance	-	-	-	X	N
		Undervoltage	-	-	-	X	N
		Overvoltage	-	-	-	X	N
		Current Unbalance	-	-	-	X	N
		Power Reversal	-	-	-	X	N
Data Acquisition & Diagnostics		Trip Target (trip reason indication)	X	X	X	X	--
		Trip Info (Magnitude / Phase)	-	-	-	X	--
		Waveform capture	-	-	-	X	N
		Trip Counter	X	X	X	X	--
		Event Logger (trip events)	X	X	X	X	--
		Relay based on current level (load shedding)	-	-	-	X	--
		Good & Bad Health Indicator	-	-	-	X	--
		Watchdog	X	X	X	X	--
Other		Zone Selective Interlock on ST, GF and I	-	O	O	O	--
		Shunt trip status input (2 inputs)	-	-	-	O	--
		UVR trip status input (2 inputs)	-	-	-	O	--
		General relay outputs and electronic inputs	-	-	X	X	--
		Communication 2 way [2]	-	O	O	X	N
		Modbus [2]	-	O	O	O	N
		Profibus [2]	-	-	-	O	N
		24V DC Auxiliary Power supply	O	O	O	O	--
		Text kit with Power support function	O	O	O	O	--

Key
X - Present; O = Optional, - = Not Possible

Remarks
N indicates that a 24V auxiliary power supply is required, a C indicates the need of a Power Conditioner

(1) Without a 24V auxiliary power supply, the lowest setting is 0.2
(2) Communication Modular is required for Envelope T breaker

Unelec Equipment
www.unelec-equipment.com
Tel: +1 319 244 84 69 UeeS Co. Tel: +1 650 466 86 39
Info@unelec-equipment.com

Time Current Curves (cold state)

LT Protection Device

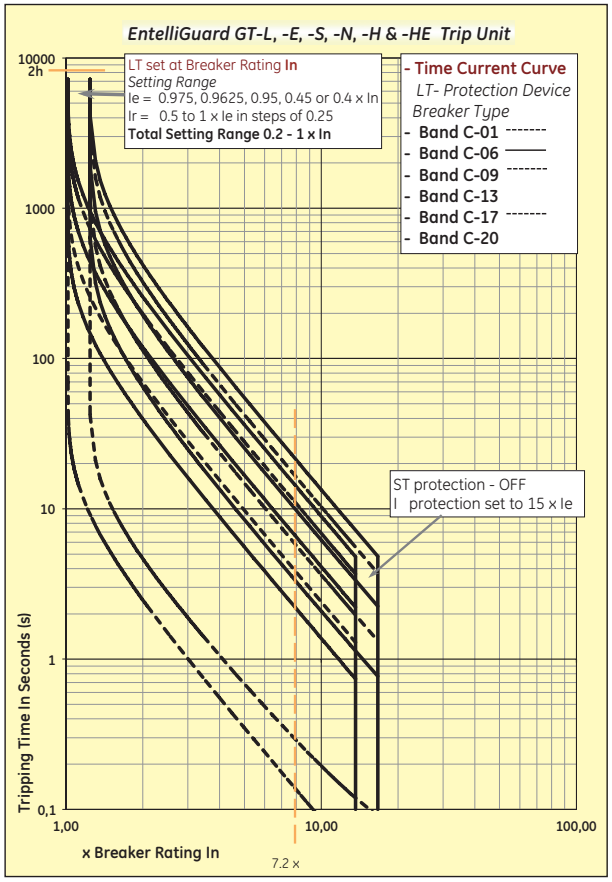

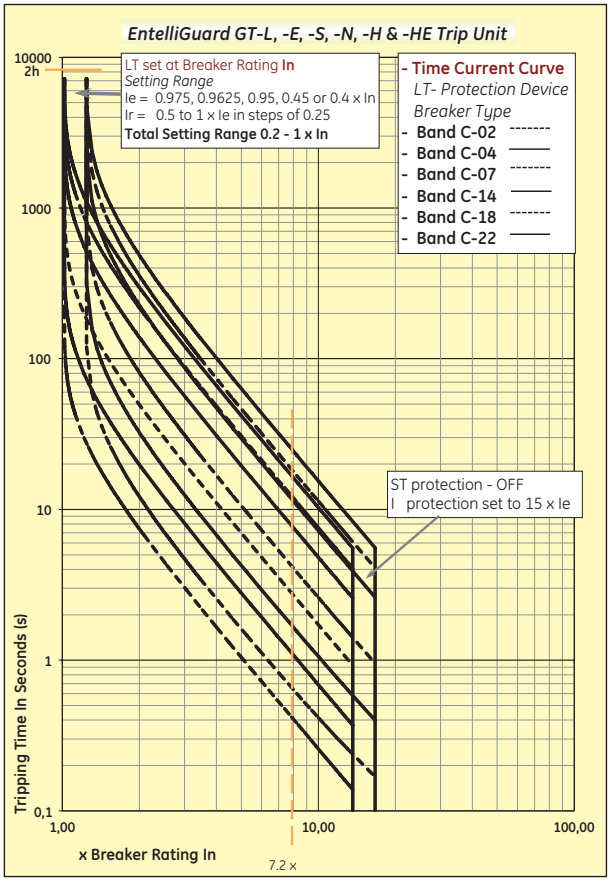

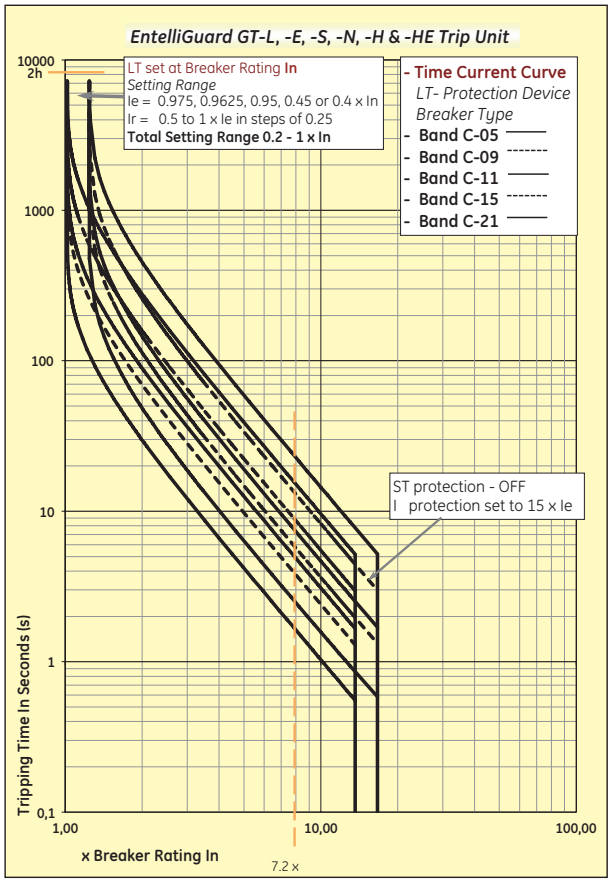

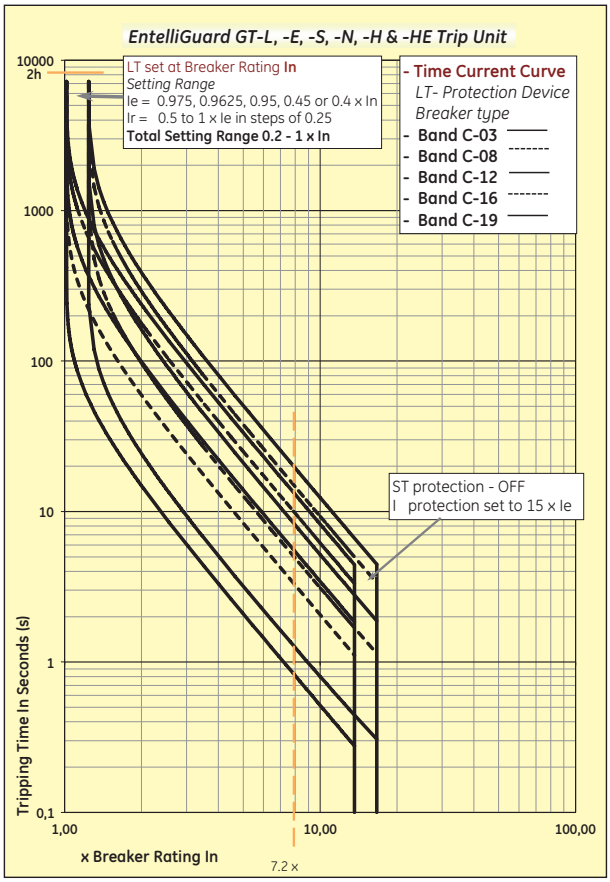

Unelec Equipment
www.unelec-equipment.com
Tel: +1 319 244 84 69 UeeS Co. Tel: +1 650 466 86 39
Info@unelec-equipment.com

Time Current Curves (cold state)

LT Protection Device

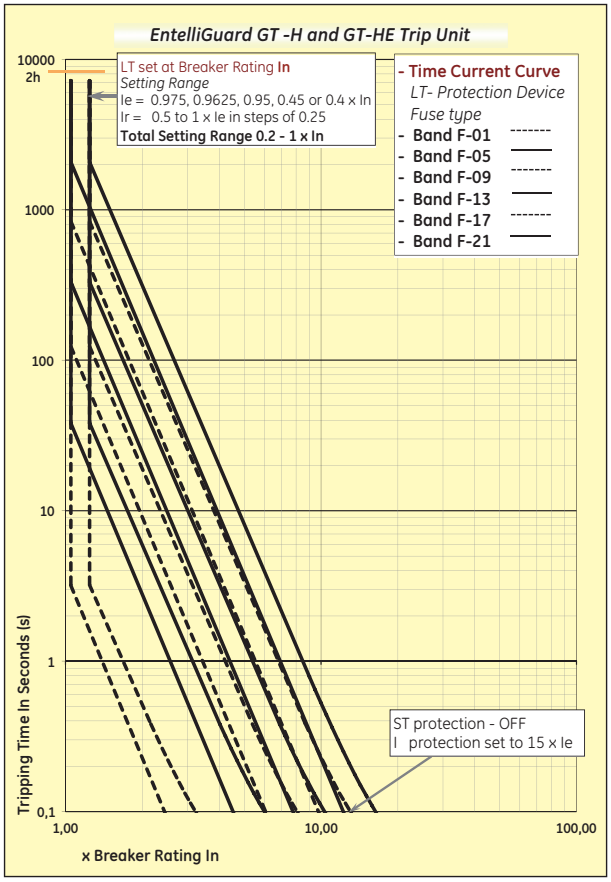

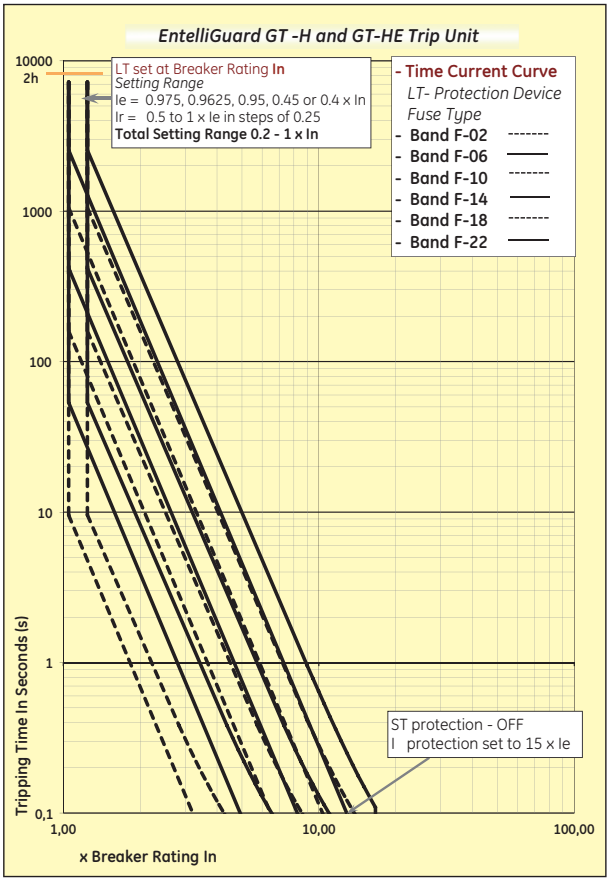

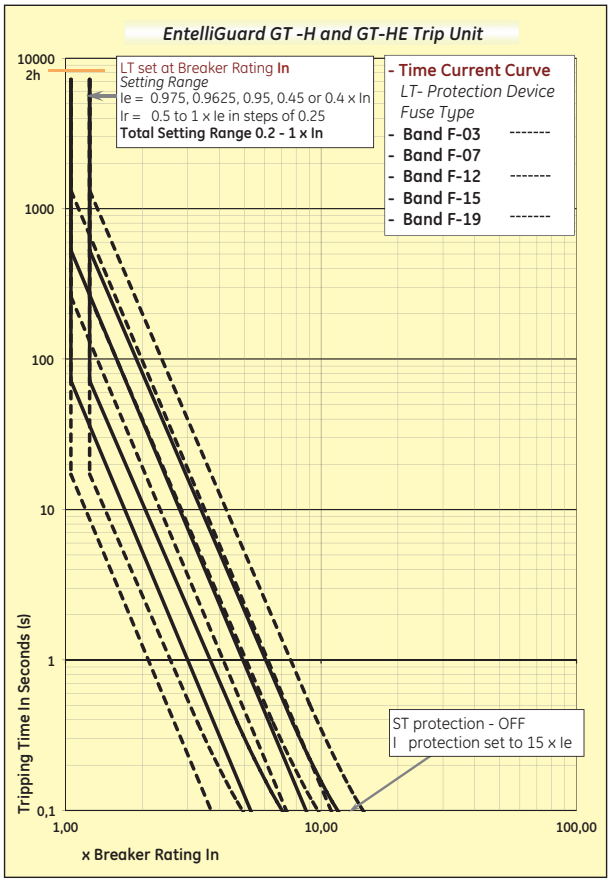

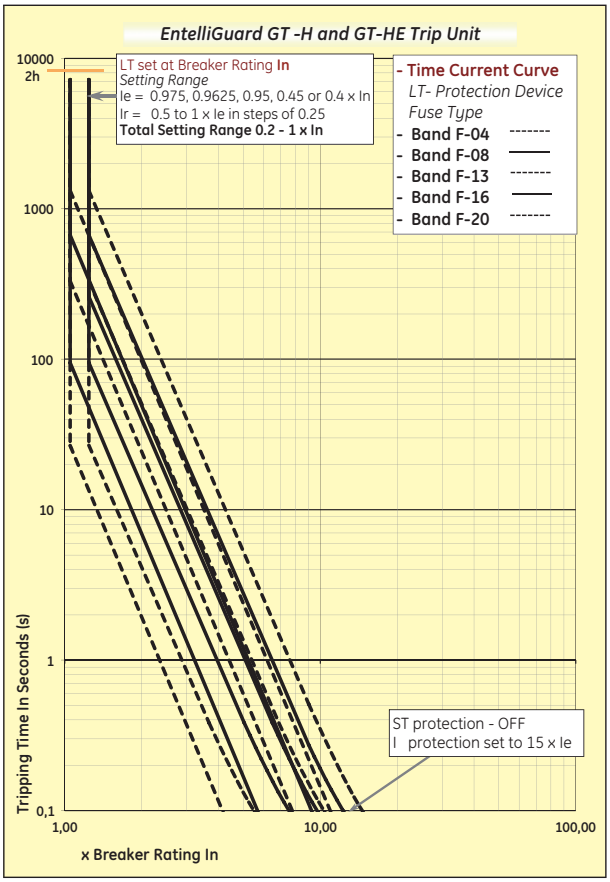

Unelec Equipment
www.unelec-equipment.com
Tel: +1 319 244 84 69 UeeS Co. Tel: +1 650 466 86 39
Info@unelec-equipment.com

Time Current Curves (cold state)

LT & ST Protection Device

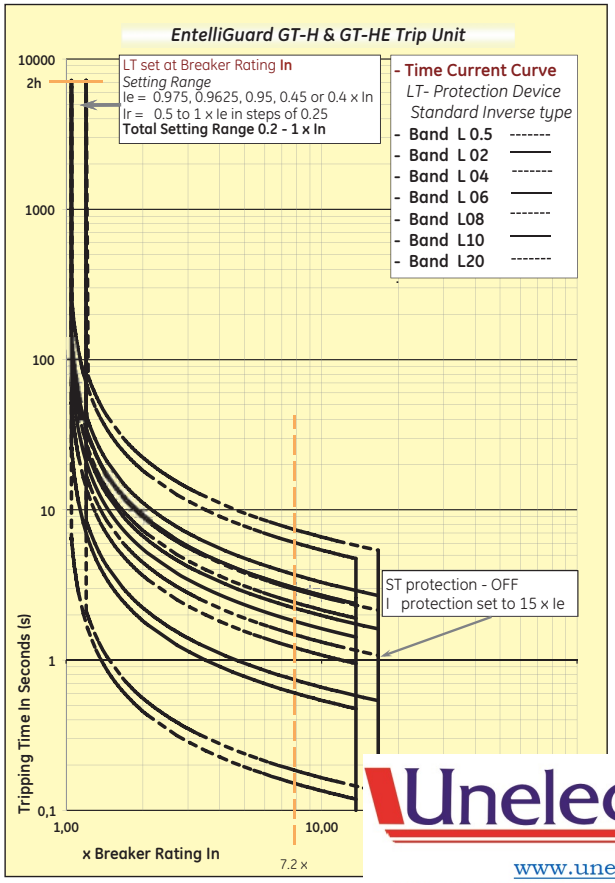

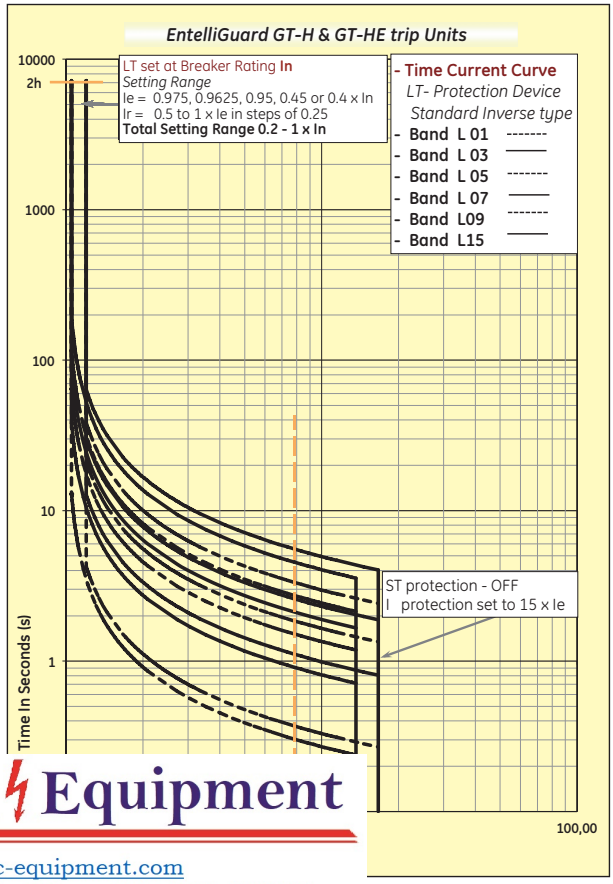

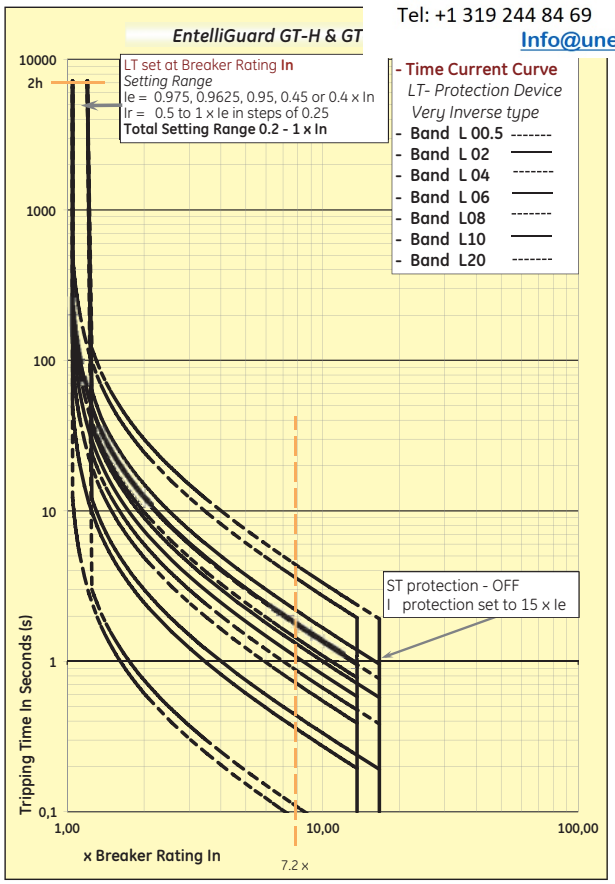

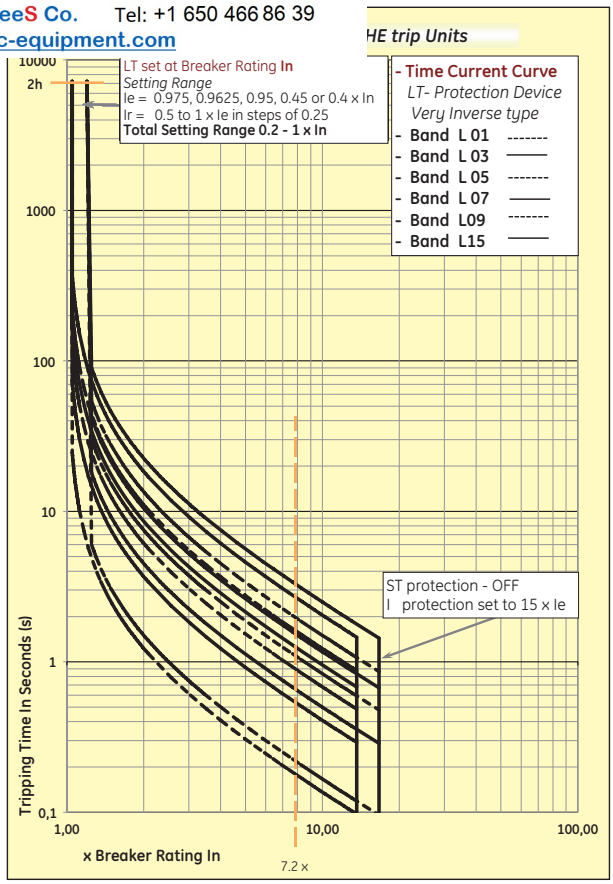

Unelec Equipment
www.unelec-equipment.com
Tel: +1 319 244 84 69 UeeS Co. Tel: +1 650 466 86 39
Info@unelec-equipment.com

Time Current Curves (cold state)

ST Protection Device

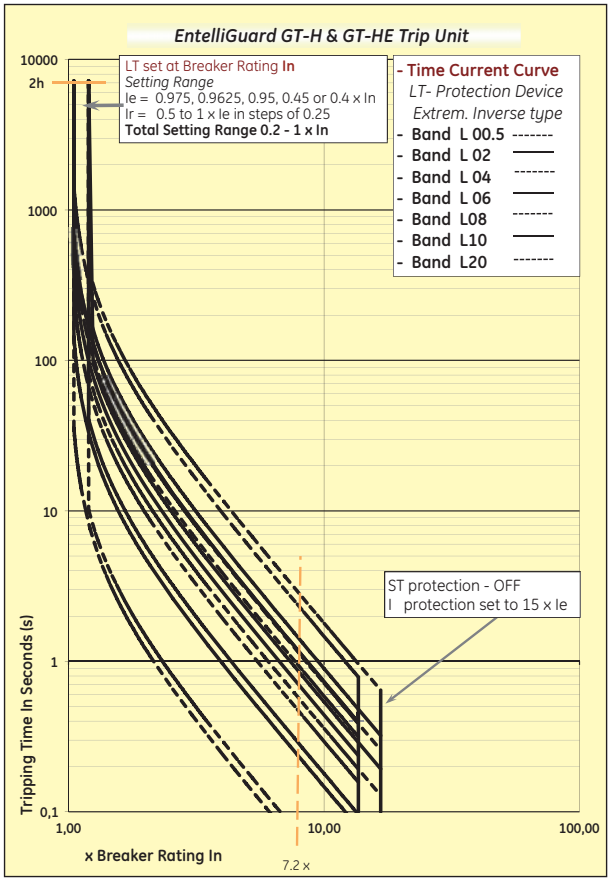

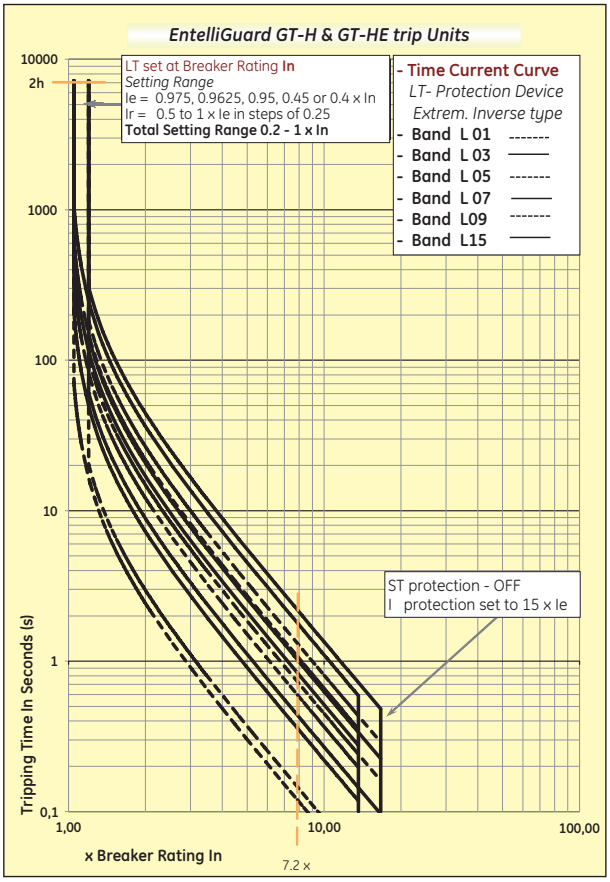

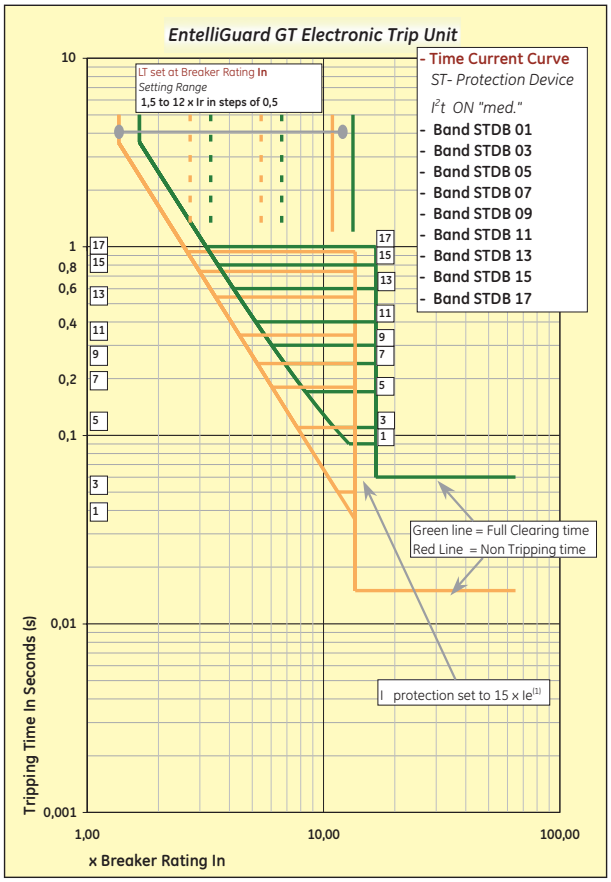

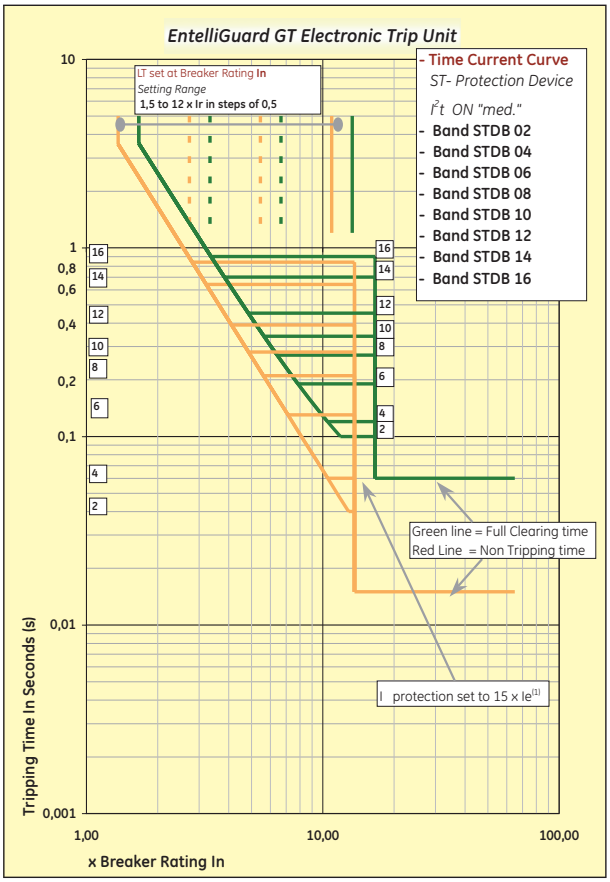

Unelec Equipment
www.unelec-equipment.com
Tel: +1 319 244 84 69 UeeS Co. Tel: +1 650 466 86 39
Info@unelec-equipment.com

Time Current Curves (cold state)

ST Protection Device

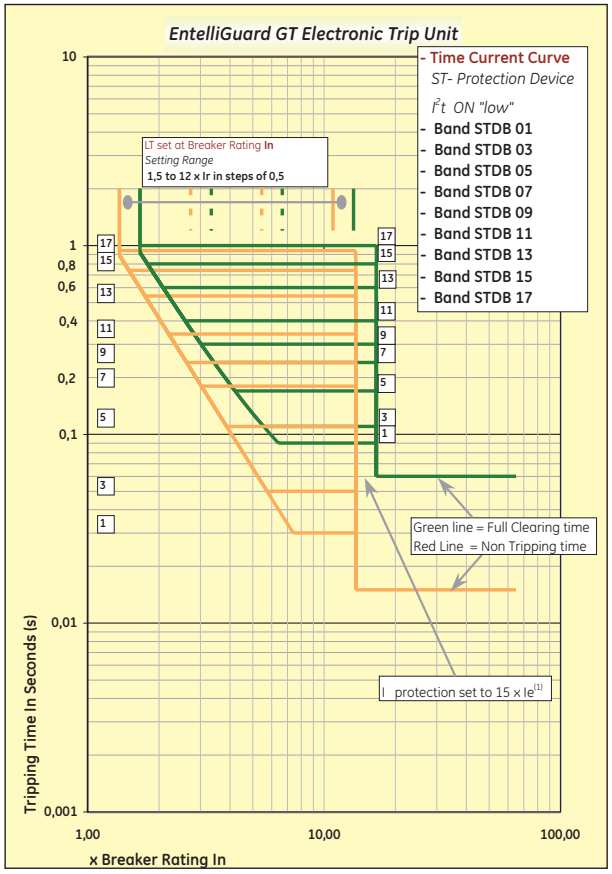

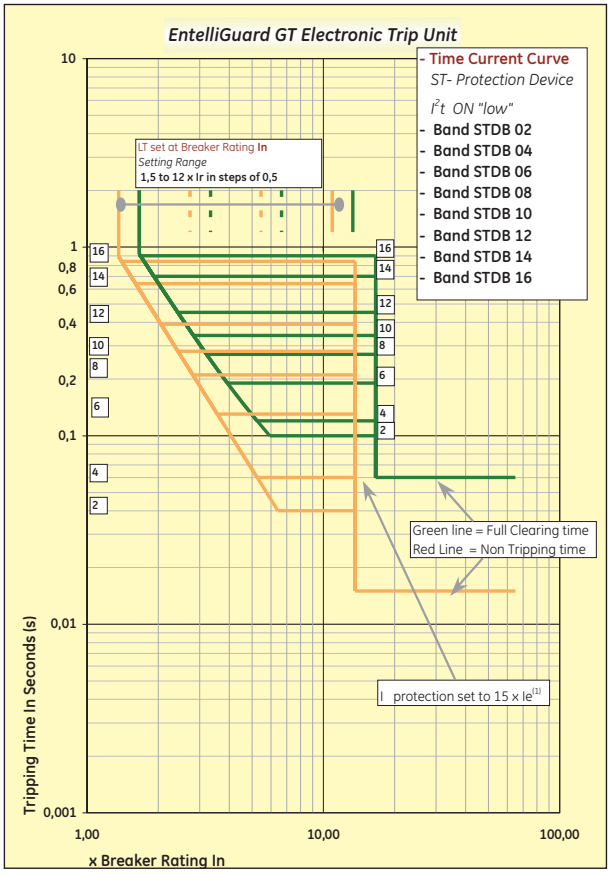

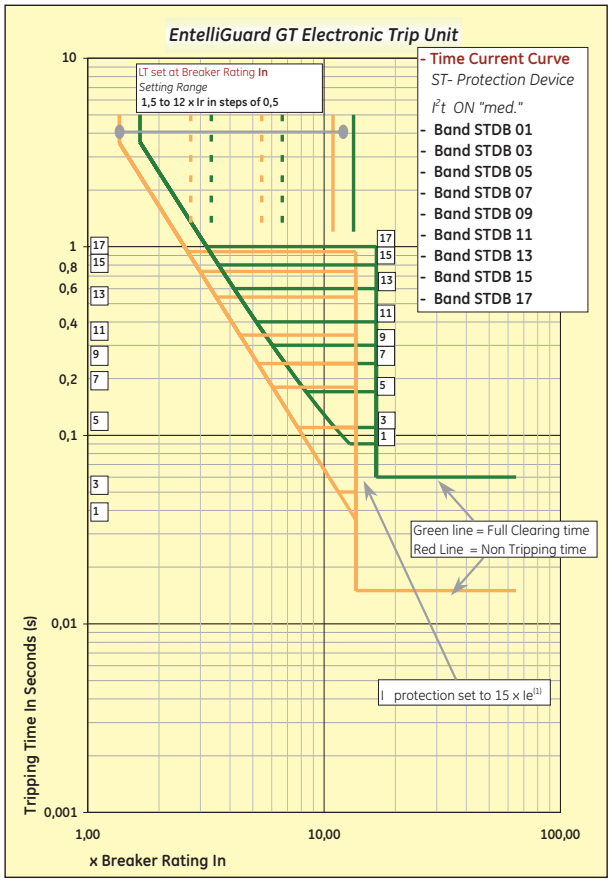

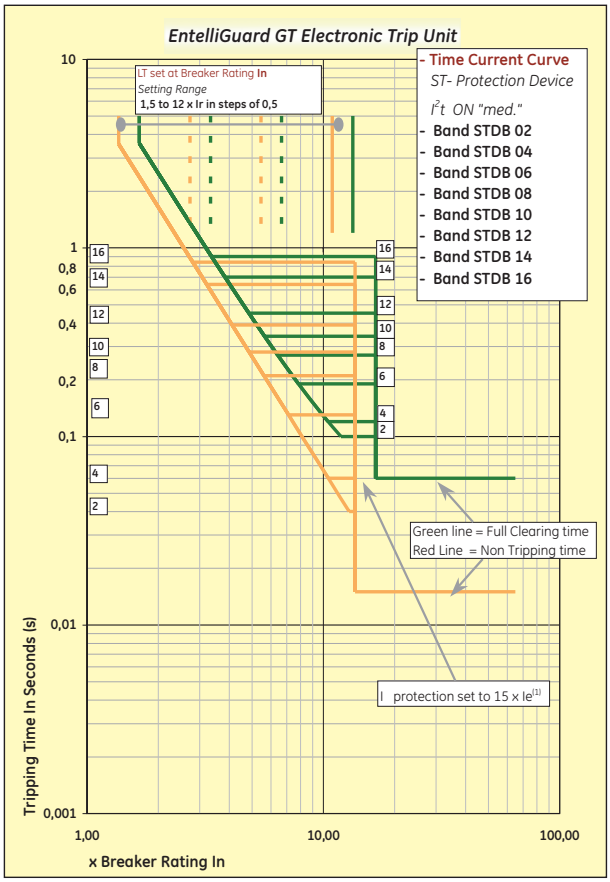

Unelec Equipment
www.unelec-equipment.com
Tel: +1 319 244 84 69 UeeS Co. Tel: +1 650 466 86 39
Info@unelec-equipment.com

Time Current Curves (cold state)

ST and I Protection Device

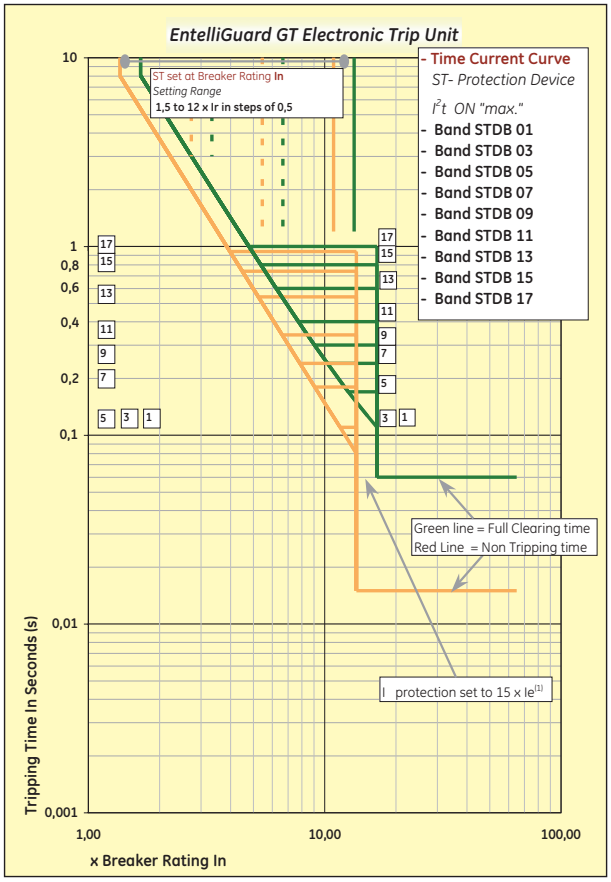

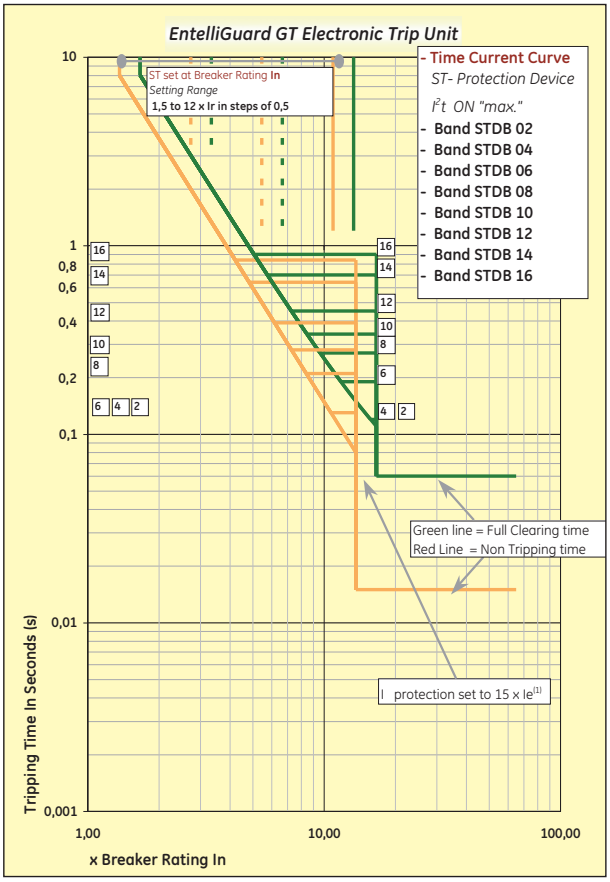

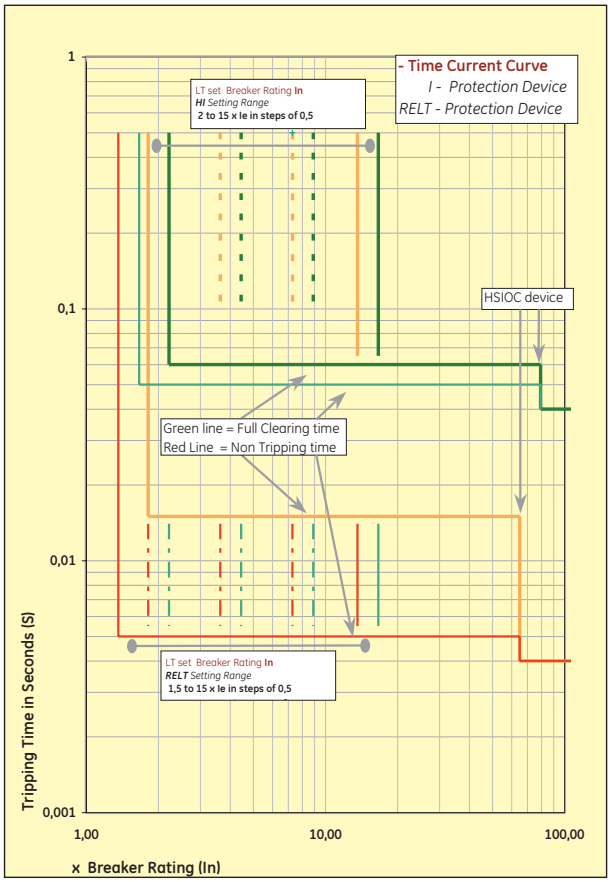

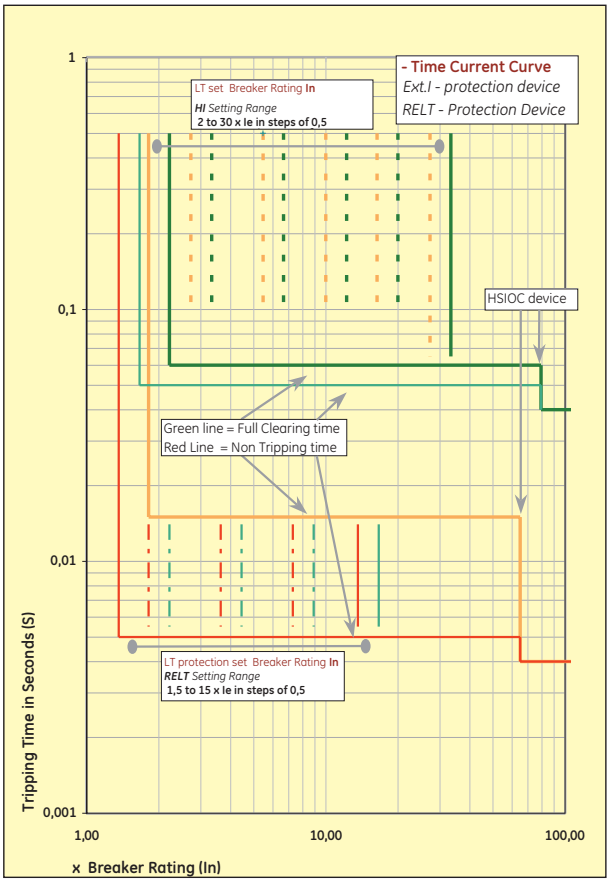

Unelec Equipment
www.unelec-equipment.com
Tel: +1 319 244 84 69 UeeS Co. Tel: +1 650 466 86 39
Info@unelec-equipment.com

Time Current Curves (cold state)

HSIOC & GF Protection Device

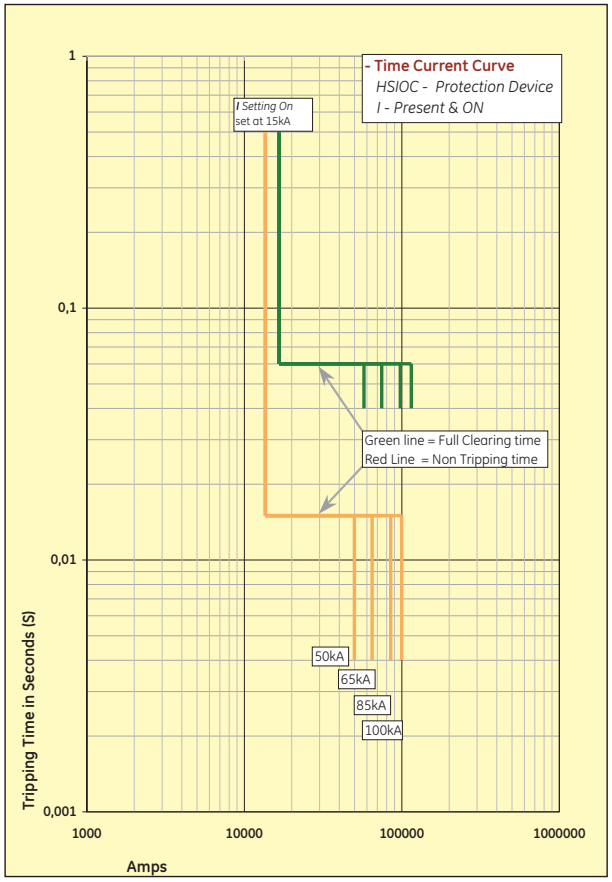

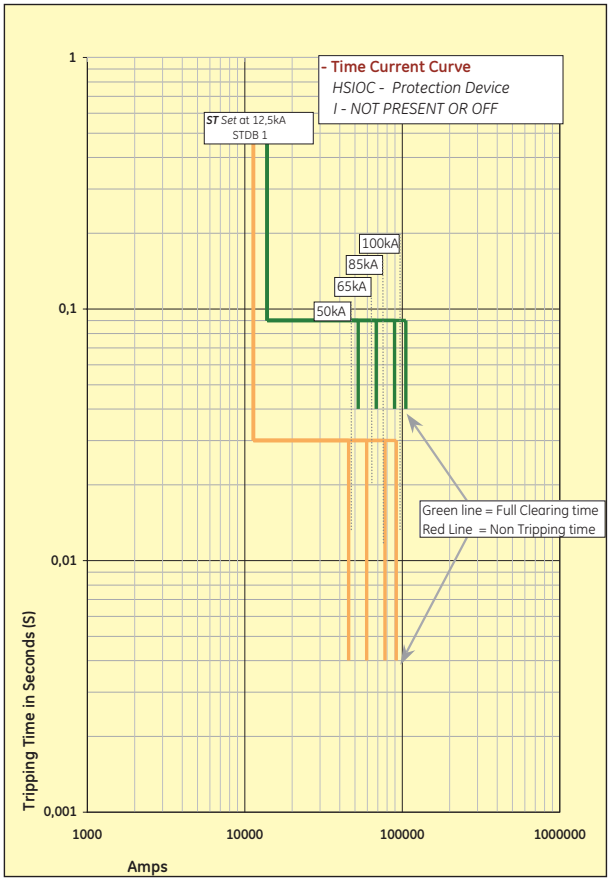

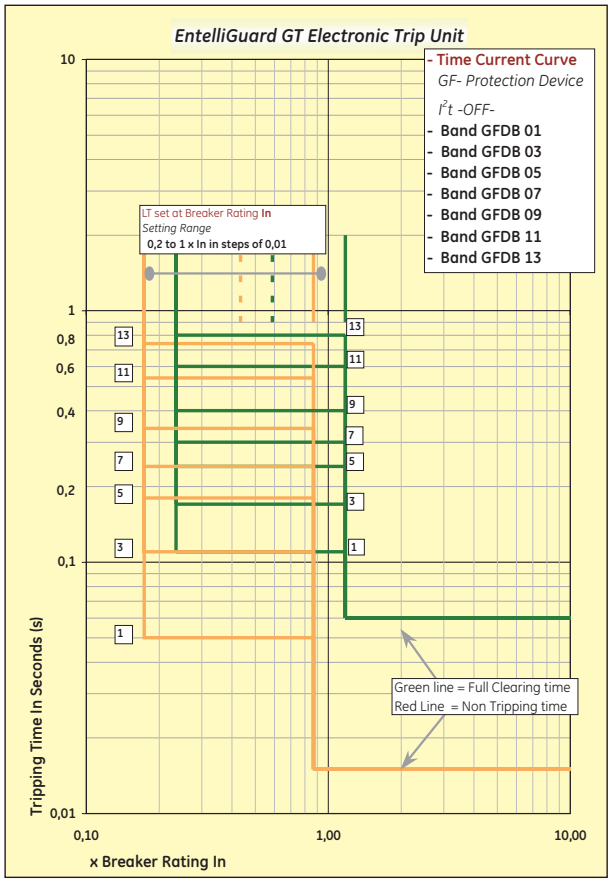

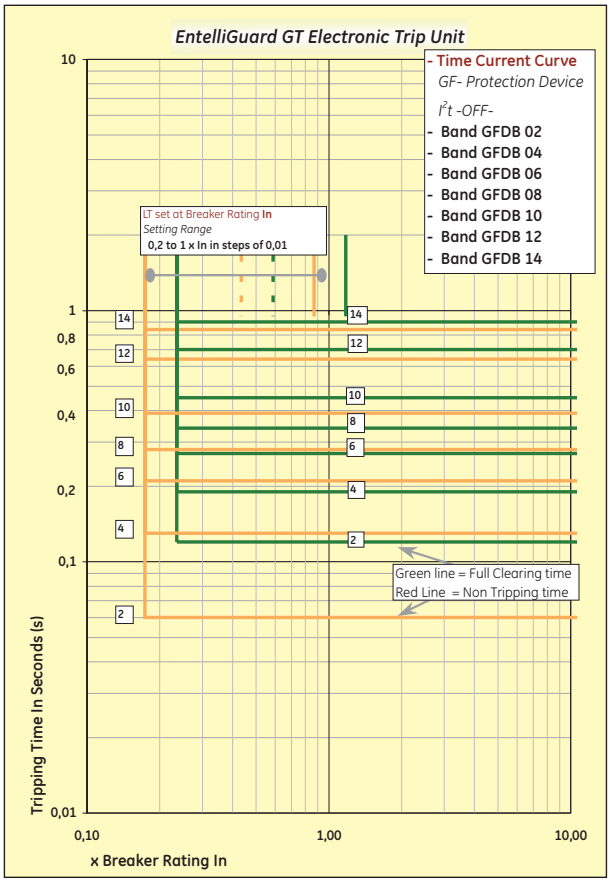

Unelec Equipment
www.unelec-equipment.com
Tel: +1 319 244 84 69 UeeS Co. Tel: +1 650 466 86 39
Info@unelec-equipment.com

Time Current Curves (cold state)

GF Protection Device

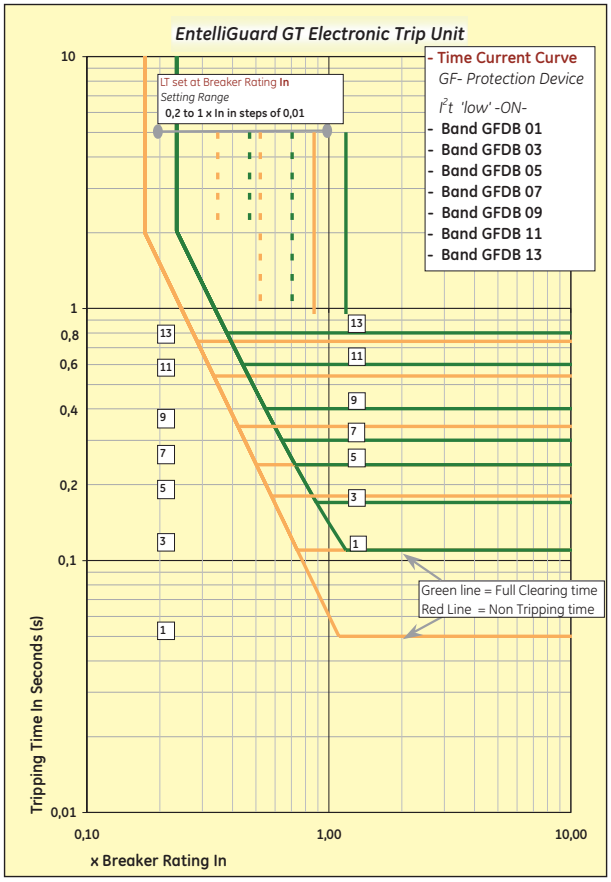

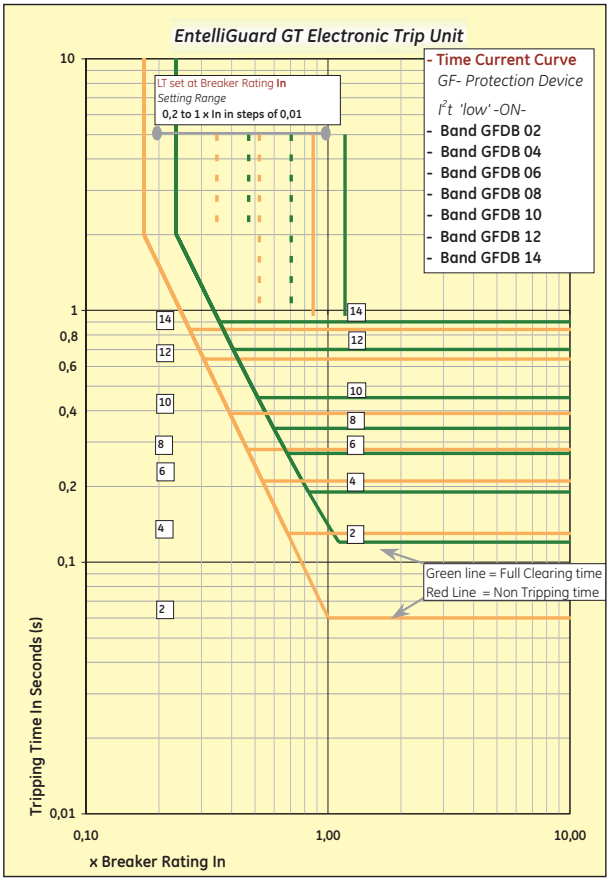

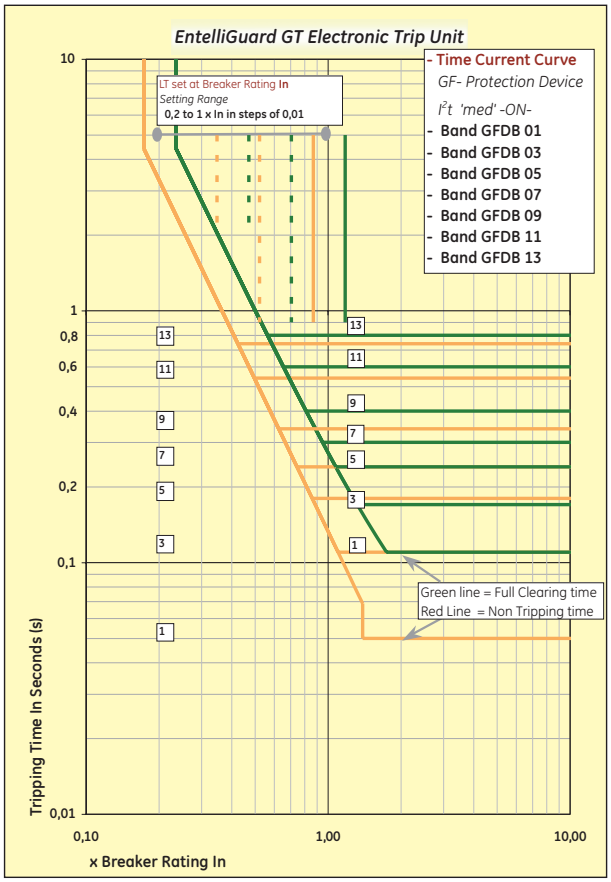

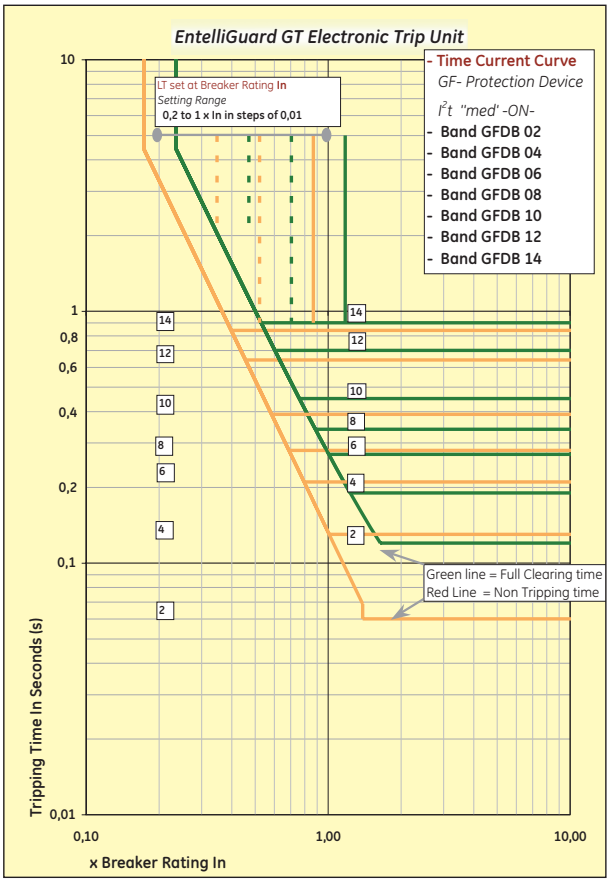

Unelec Equipment
www.unelec-equipment.com
Tel: +1 319 244 84 69 UeeS Co. Tel: +1 650 466 86 39
Info@unelec-equipment.com

Time Current Curves (cold state)

Terminology

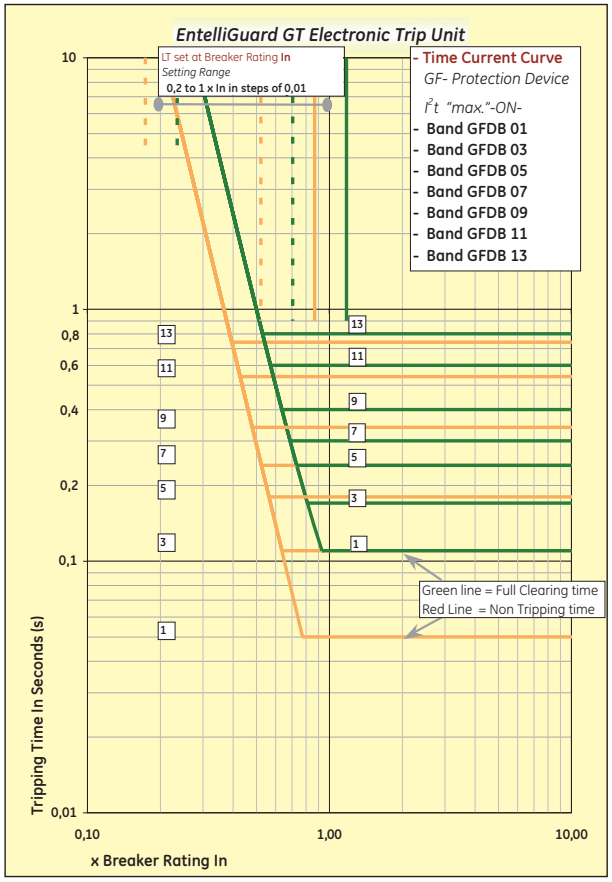

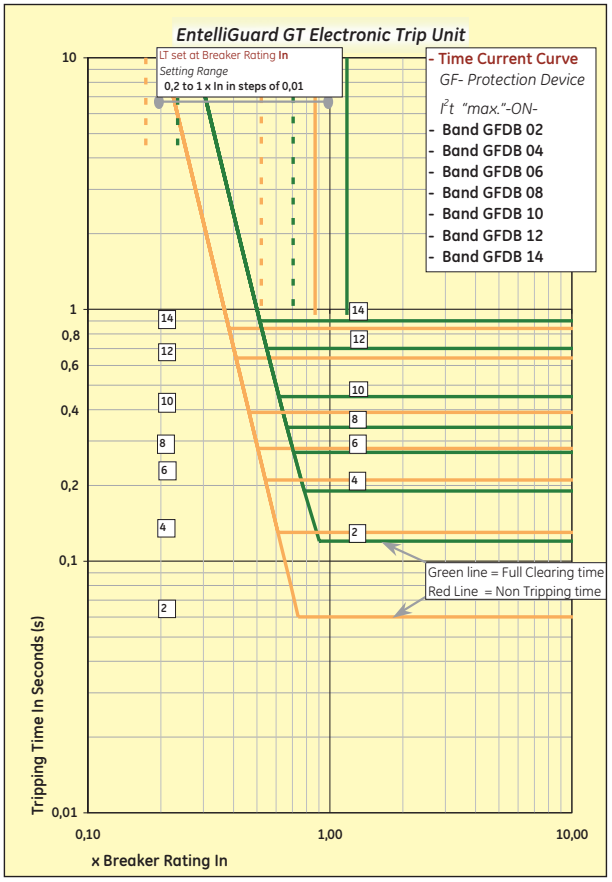

Denonimation	Description
In	Current rating of Breaker
Ie	Primary Current setting
Iu	Maximum Breaker User current (see section D)
LT	Long Time or Overload protection
ST	Short Time or Timed Short-circuit Current setting
I	Standard or Extended Instantaneous setting
GF	Groundfault
EF	Earthfault
Ir	LT or overload Current setting
Ist	ST or Timed Short-circuit Current setting
Ii	Instantaneous Short-circuit Current setting
Ig	Ground, or Earthfault Current setting
LTDB	LT or overload time delay band *(C = breaker type, F = fuse type)*
STDB	ST or Short-circuit time delay band
I²t	'Slope' setting on ST or GF device
x LT	Multiple of LT or overload Current setting
x Ie	Multiple of ST or Timed Short-circuit Current setting
x In	Multiple of Breaker Current rating
x CT	Multiple of installed sensor rating *(In IEC EntelliGuard™ types =In)*
RELT	Reduced Instantaneous
MCR	Making Current Release
HSIOC	Hi set Instantaneous protection

Unelec Equipment
www.unelec-equipment.com
Tel: +1 319 244 84 69 UeeS Co. Tel: +1 650 466 86 39
Info@unelec-equipment.com

Time Current Curves (cold state)

Example of Full Time Current Curve

Time Current Curve
The EntelliGuard™ Electronic trip unit has many sophisticated setting features and an extremely broad setting range.
On request we can provide complete Time Current Curves covering all installed protection devices. The curves can be produced for any current setting within the range of the installed protection devices, for one or for a combination of two breakers.
Please contact your local GE Sales Office for more information.

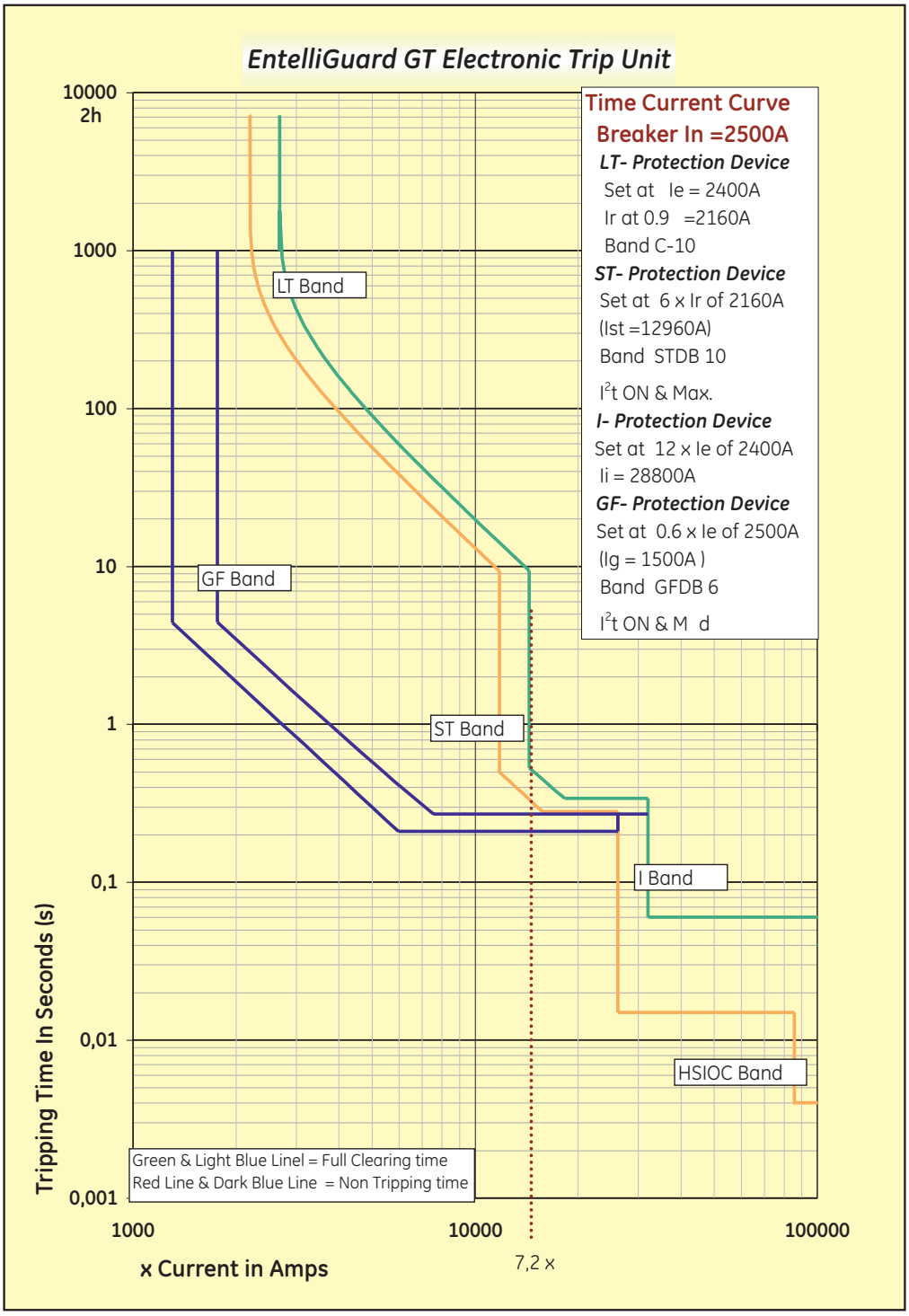

Breaker Accessories

C.2 Breaker Use & Operation
C.3 Electrical Operation of Breaker (Motor Operator)
C.4 Shunt & Undervoltage Releases; Time Delay Module for Undervoltage Release
C.5 Interlock Devices, Indication Contacts and Number of devices
C.6 Auxiliary Contacts
C.7 Bell Alarm, Cassette position, Spring charged and Ready to Close indication contacts
C.8 Mechanical Interlocking of Multiple Breakers
C.9 Locking previsions for Breaker and Cassette Door-Interlock systems; Mis insertion device
C.10 Installation Accessories
C.11 Earthing device (maintenance accessory) Spare Parts

Unelec Equipment
www.unelec-equipment.com
Tel: +1 319 244 84 69 UeeS Co. Tel: +1 650 466 86 39
Info@unelec-equipment.com

Breaker Use & Operation

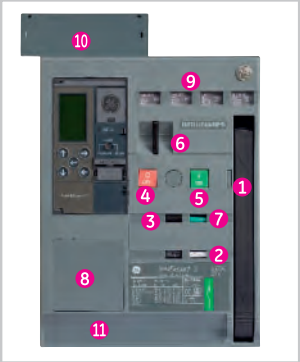

Indicated Breaker is of a Fixed Pattern and equipped with Trip Unit

A Power Circuit Breaker
EntelliGuard™ is operated by a stored energy mechanism that can be charged either manually or electrically. To charge manually a handle ❶ is used to 'load' the springs in the mechanism, 10 pumping movements being required. During charging a spring status indicator ❷ clearly indicates if the breaker is CHARGED (Red), CHARGING (Yellow), or DIS-CHARGED (Green).
After charging is complete, the ready to close indicator ❸ indicates that the device can be turned ON and OFF[1] by the ON/OFF buttons (❹ & ❺) on the breaker front facia. On the Envelopes 1, 2 & 3 a padlocking mechanism ❻ is present for up to three locks to lock the breaker in "OFF" position.
On the Envelope T an accessory ⓫ is available that, when used, allows the of uses of two kinds of keylock or a padlock to lock the device in its 'OFF" position.
An electrical charging mechanism negates the need for loading the springs manually and allows remotely located pushbuttons to be used to switch ON & OFF (see page C.3).
The contact position indicator ❼ on the Breaker front provides the user with the correct status of the breaker be it OFF or ON. This indicator is linked to the mechanism and contact system in a manner that allows the device to be used as a Disconnector and to meet the 'Positive Contact Indication' requirements.
The Breaker Mechanism is of the trip free type and has an integrated anti-pumping system.
On the Envelopes 1, 2 & 3 the front Facia alos includes room for an optional key interlock device ❽ that prevents the breaker from being closed.
On the Envelope T an accessory ⓫ is available that, when used, allows the of uses of two kinds of keylock or a padlock to lock the device in its 'OFF" position.

The breaker can be equipped with up to four factory or fieldMountable releases, 1 x closing coil and a combination of shunt and undervoltage releases being possible. The presence of these releases is made visible on the facia by the use of 4 indicator windows ❾.[2]
EntelliGuard™ Power Circuit Breakers are available in two patterns, fixed and draw-out. A Fixed device is bolted to a substructure or wall and the power connections are directly fixed to the breaker. A draw-out device has a cassette that is mounted and connected separately.
A fixed breaker requires the connection and fixation to be removed to replace the breaker.
A breaker in draw-out pattern is supplied as a moving portion, that easily slides in and out of the separately fixed and connected cassette.

Each standard device is supplied with 3 NO and 3 NC potential free auxiliary contacts. A IP31 front panel with door escutcheon seal and a IP20 terminal strip or plug ⓫ with 39 connection points to wire out accessories.

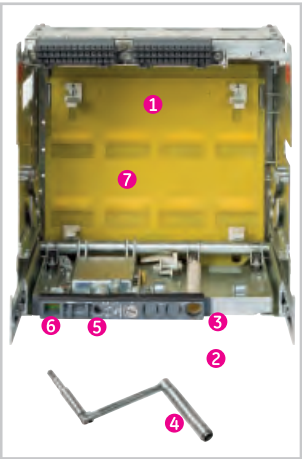

Draw-out pattern cassette
To dismount a EntelliGuard™ in the fixed pattern it is required that the power supply is turned off and the connections are removed.
A breaker in the draw-out pattern can be quickly and efficiently removed from the system without disconnecting the Power Supply or removing the connections.
The Draw-out system allows easy and simple access to the breaker and its components and enables the user to fully disconnect the power from the installation for maintenance purposes. Access to the breaker being required for periodic checks and some very limited maintenance allowing the device to be used over its full life span.
The cassette ❶ is mounted and connected separately and the EntelliGuard™ breaker is supplied as a moving portion that is easily inserted into the cassette. A racking handle ❷ is stored within an aperture ❸ in the cassette. After removing and unfolding the racking handle and disengaging the blocking mechanism ❹, the handle can be inserted into the 'racking' aperture ❺.

By rotating the racking handle clockwise to move the moving portion inwards (connect) and anti-clockwise to move outwards, (disconnect) the breaker can be racked into one of three positions:

CONNECTED	Breaker and cassette are fully operational all contacts are connected.
TEST	The maincontacts are **not connected.** The Auxiliary contacts are **connected**.
DISCONNECTED	The main and auxilary contacts are not connected. The breaker is still inside the cassette.

To remove the breaker from the cassette, the racking handle must be removed from the 'racking' aperature.

A Position indicator ❻ provides a positive mechanical indication of the indicated Connected, Test and Disconnected positions.
Each EntelliGuard™ cassette has integrated Safety Shutters ❼ that automatically isolate the user from live parts when the moving portion is in disconnect or test position.
Multiple accessories as carriage position switches, mechanical interlocks, a miss-insertion device, IP54 front protection covers[3] and key lock devices are available (please refer to the relevant sections in this chapter).

Each standard cassette is supplied with standard main connections, racking handle, safety shutters and a IP20 terminal socket system with 39 connection points to wire out accessories.

(1) Independent of the breaker position (tripped or ON) the device always provides sufficient energy to switch the breaker 'OFF'
(2) Four is applicable for the Envelopes 1, 2 & 3, Envelope T: Three.
(3) Not available on Envelope T

Unelec Equipment
www.unelec-equipment.com
Tel: +1 319 244 84 69 UeeS Co. Tel: +1 650 466 86 39
Info@unelec-equipment.com

Electrical Operation of Breaker

Electrical Charging mechanism (motor)
In order to charge the stored energy mechanism electrically a motor mechanism is available. The design allows factory or field mounting and is available for the full range of EntelliGuard™ breakers. It is easily fitted with just three bolts. When the circuit breaker is opened, the mechanism automatically recharges the springs and prepares the breaker for an almost instantaneous reclosure should the need arise. High speed recharging ensures that the springs are fully charged within four seconds. A "Spring Charged" contact that indicates the status of this device is always present. A 2nd 'ready to close' contact is available that indicates that the springs have been recharged and that the breaker can be closed.
The device is available in multiple AC & DC voltages and can be used in a operating frequency of up to two operations per minute. it has a life span equivelant to that of the breaker without maintenance. To switch the EntelliGuard™ Breaker ON & OFF remotely a Closing Coil and Shunt Release is also necessary.

Connections
The Charging mechanism connection points can be found on terminal A of both the fixed pattern & draw-out Breaker types.

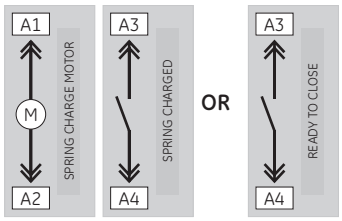

Electrical characteristics

Control Voltage	Motor Operator Envelope T	Motor Operator Envelope 1	Motor Operator Envelope 2 & 3
	Power Consumption		
24-30V DC, 48V DC, 60V DC, 110-130V DC, 220 - 250V DC	300W	300W	480W
48V AC, 110-130V AC, 220-240V AC, 380-400V AC, 440V AC	350VA	350VA	560VA

Closing Coil
To switch the Power Circuit Breaker ON remotely a closing coil is available that when energized releases the spring charged closing mechanism.
The device is available as a factory mounted component or as a field mountable device. It is an extremely easy-to-fit, clip-on unit, with simple plug-in connectors.
The coils have a life span equivalent to that of the full breaker life span.

Command Closing Coil (1)
A second closing coil type is available replacing the standard type. This device offers an extended functionality with all the features of the standard device. Additional connections allow this type to be wired out through the trip unit and to be accessed electrically through the communications bus. It is supplied with an extra 'ON' push button that fits onto the breaker front facia. Fitting between the two existing ON and OFF buttons gives the user an extra electrical 'ON' option locally. The coils can be used in an operating frequency of up to two operations per minute and have a life span equivalent to that of the full breaker life span.

Connections
The Closing coils & Command closing coils connection points can be found on terminal A of both the fixed pattern & draw-out Breaker types.

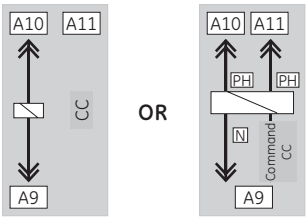

Electrical characteristics

AC	DC	Power Consumption
--	24V	350 VA Inrush
48V	48V	
--	60V	
110-130V	110-130V	
220-240V	220-240V	
277V	250V	
380-415V	--	
440V	--	

(1) The command closing coil is only available with 3NO & 3NC Auxiliary contacts for Envelope T (4NO and 4NC not possible).

Unelec Equipment
www.unelec-equipment.com
Tel: +1 319 244 84 69 UeeS Co. Tel: +1 650 466 86 39
Info@unelec-equipment.com

Shunt & Undervoltage Releases

Shunt Release
A device designed to switch the Power Circuit Breaker OFF remotely. When energized a Shunt Release instantaneously activates the circuit breaker mechanism thus ensuring a rapid disconnection of the main contacts (50msec).
EntelliGuard™ Shunt Releases are available as an impulse or as a continously rated type. The continously rated types are designed to be used as a closure prevention device when energized.
The impulse rated types must always be used with a breaker auxiliary contact.
In the Envelopes 1.2 & 3 two Shunt Releases can be fitted in the Envelope T one.
The device is available as a factory mounted component or as a field mountable device. It is an extremely easy-to-fit, clip-on unit, with simple plug-in connectors.
The individual devices have a wide voltage range, thus limiting the number of devices needed and have a life span equivalent to that of the full breaker life span.

Remote Reset Coil
The Remote Reset Coil is a standard continously rated Shunt Release device mechnically linked to the reset mechanism of the breaker. (PMU base)
For resetting remotely using this accessory the knob on the front the trip unit should be set to the manual position.
The device is only available as a factory mounted component.

Undervoltage Release
A device designed to open the breaker contacts and to prevent the breaker from closing when in a 'No volt' condition. On a de-energization the Undervoltage release activates the circuit breaker mechanism and ensures a rapid disconnection of the main contacts (50 Milliseconds). When not re-energized in accordance to the conditions stated in the IEC 60947 the device prevents the Power Circuit Breaker from closing.
The EntelliGuard™ Undervoltage releases are designed to react within a pre-defined Voltage band, only reacting when the voltage supplying drops below the limits of this band. To prevent nuisance tripping due to short power interruptions or 'Brown Outs' the device has a built in delay of 50 Milliseconds.
In the Envelopes 1, 2 & 3 two Undervoltage Releases can be fitted in the Envelope T one.

The device is available as a factory mounted component or as a field mountable device. It is an extremely easy-to-fit, clip-on unit, with simple plug-in connectors.
The individual devices have a wide voltage range, thus limiting the number of devices needed and can be used in a operating frequency of up to two operations per minute. The releases can have a life span equivalent to that of the full breakers life span.

Connections
The connection points of both releases can be found on terminal A of both the fixed pattern & draw-out Breaker types. In Envelope T it is possible to mount 1 UVR and 1 ST Release. In Envelope 1, 2 & 3 it is possible to mount a total of three releases, the third being a UVR **OR** Shunt release.

Envelope T

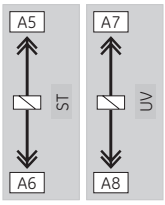

Envelope 1 & 2 & 3

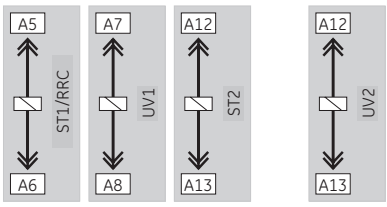

Electrical characteristics releases
Continously rated Shunt releases & Undervoltage releases

AC	DC	Power Consumption
--	24V	350 VA / 350 W Inrush 60 VA / 50W Holding
48V	48V	
--	60V	
110-130V	110-130V	
220-240V	220-240V	
277V	250V	
380-415V	--	
440V	--	

Impulse rated Shunt releases

AC	DC	Power Consumption
24V	24V	480 VA / 480 W Inrush
110-130V	110-130V	
220-240V	220-240V	

Time Delay Module
The de-energizing operation of the Undervoltage release can be delayed. This optional, externally mounted module has an adjustable time delay of zero to three seconds. The device can be implemented to prevent undesired Breaker tripping due to momentary voltage interruptions and is connected in series with the Undervoltage release.
Optionally, the EntelliGuard™ Trip Unit can be supplied with a three phase plus neutral Undervoltage protection device that can provide a power interruption alarm and/or initiate a breaker 'trip'.

Electrical characteristics releases

AC	DC	Power Consumption
48V	--	350 VA Inrush 60 VA Hold
--	48V	
--	60V	
110-130V	--	
--	110-130V	
220-240V	--	
--	250V	
250-277V	--	
380-415V	--	
440V	--	

Interlock Devices, Indication Contacts and Number of devices

Network Interlock Device[1]

When devices as the EntelliGuard™ Power Circuit Breaker are used in Automatic or Manaul Power Transfer systems, local access and operation of the device can be undesirable. The Network Interlock Device is an optional mechanical lockout device that can be added to electrically operated circuit breakers. It is a logic driven interlock with two positions, LOCKOUT and RESET. The Network Interlock is locked out and reset by means of voltage pulse applied across respective terminals.[1]

Setting the Network Interlock to LOCKOUT when the breaker is closed causes the breaker to trip. In the LOCKOUT position, the Network Interlock holds the breaker mechanically trip free and also inhibits electrical closing. A command to reset the Network Interlock must be provided before the breaker can be closed manually or by control logic. Loss of control power does not cause the Network Interlock to reset. The Network Interlock can also RESET by pushing the reset button provided on the front face of accessory.

The device is available as a factory mounted component and has the volume of two releases (Shunt/Undervoltage).

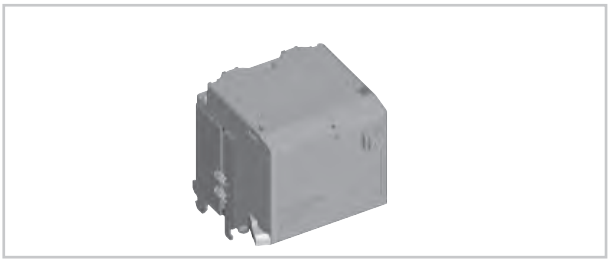

Connections

The device replaces 1 Shunt and 1 Undervoltage release and is wired out to the same connection points located on terminal A of both the fixed pattern & draw-out Breaker types.

Number of devices

In Envelope T it is possible to mount 1 UVR and 1 ST release and one closing coil (in three locations).

In Envelope 1, 2 & 3 it is possible to mount a total of three releases, the third being a UVR **OR** Shunt release, and one closing coil (in four locations).

Shunt Release (Shunt), Closing & Command closing coils (CC/CCC) and Undervoltage Releases (UVR) can be mounted in the following combinations. The Network Interlock device as described above takes 2 of the indicated 4 spaces.

Envelope T

Combination	Coil position on front facia, from left			
	1	2	3	
A	Shunt	CC/CCC	UVR	

Envelope 1&2&3

Combination	Coil position on front facia, from left			
	1	2	3	4
A	Network	Interlock	CC/CCC	UVR
B	Shunt/RRC	UVR	CC/CCC	Shunt
C	Shunt/RRC	UVR	CC/CCC	UVR
D	Network	Interlock	CC/CCC	Shunt

Release Indication Contacts[2]

To indicate, if a Shunt or an Undervoltage release initiation has resulted in a breaker, OFF or TRIP, a contact can be fitted to the releases. The contacts are available in two versions; one power rated for use in standard Circuits and a second signal rated type for use with the Electronic Trip Unit communication option.

The contacts are available as a factory mounted component or as a field mountable device. They are extremely easy-to-fit, clip-on units, with simple plug-in connectors.

Connections

The connection points of the power rated contacts can be found on terminal B of both the fixed pattern & draw-out Breaker types[3]. The Signal rated types are connected to the Electronic Trip Unit and are only accessible through the optional Communication option.

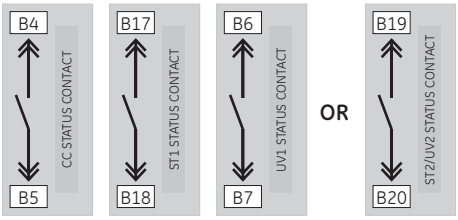

Electrical characteristics
Power Rated types

AC Ratings		DC Ratings	
Voltage	Amps	Voltage	Amps
250V	AC21-6A	125V	DC21-0.4A
		250V	DC21-0.2A

Minimum Operating Current 0.16 A at 5V DC

Signal Rated, gold plated contact types

AC Ratings		DC Ratings	
Voltage	Amps	Voltage	Amps
125V	AC21-0.1A	8-30V	DC21-0.1A

Minimum Operating Current 1mA at 5V DC

Unelec Equipment
www.unelec-equipment.com
Tel: +1 319 244 84 69 UeeS Co. Tel: +1 650 466 86 39
Info@unelec-equipment.com

(1) The Network Interlock Device is only available in Envelope 1, 2 & 3
(2) The release indication contacts are only available in Envelope 1, 2 & 3
(3) The use of these devices limits the wiring out of some auxiliary contacts (see section E for full schematics)

Auxiliary Contacts

Auxiliary Contacts
Auxiliary contacts are designed to indicate the position of the Power Circuit Breaker main contacts. Each EntelliGuard™ device is supplied with a standard package of 3 Normaly open (NO) and 3 normally closed (NC) contacts that operate simultaneously with the breakers main contacts.
Optionally other packages are available that can be used to increase the number of available contacts by replacing the standard auxiliary contact block.

Auxiliary Contact packages
- Power rated contacts 4 NO & 4 NC(1)
- Power rated contacts 8 NO & 8 NC(2)
- Power rated contacts 3 NO & 3 NC plus Signal rated contacts 2 NO & 2 NC(2)
- Power rated contacts 4 NO & 4 NC plus Signal rated contacts 4 NO & 4 NC(2)

The devices are available as factory mounted components or as a field mountable device. Auxiliary contact packages are easy-to-fit, and have simple plug-in connectors.

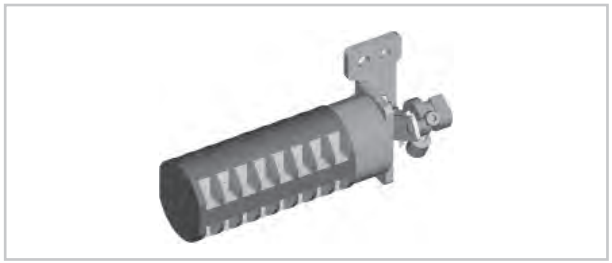

Connections
The connection points of the auxiliary contacts can be found on the two terminals (A & B) of both the fixed pattern & draw-out Breaker types.

Electrical characteristics Auxiliary Contacts
Power Rated types

AC Ratings		DC Ratings	
Voltage	Amps	Voltage	Amps
110-130V	AC21 - 15A AC23 - 10A	24V	DC21 -15A
220-240V	AC21 - 10A AC23 - 5A	110-130V (3)	DC21 -10A
380-440V	AC21 - 5A AC23 - 2.5A	250V (4)	DC21 -5A

Minimum Operating Current 0.1A at 8V DC

Signal Rated, gold plated contact types

AC Ratings		DC Ratings	
Voltage	Amps	Voltage	Amps
250V	AC21-0.1A	8-30V	DC21-0.1A

Minimum Operating Current 10 mA at 5V DC

(1) The 4NO & 4NC Auxiliary contacts are only available in Envelope T
(2) These devices are only available in Envelope 1, 2 & 3, and limits the wiring
(3) Three contacts in series
(4) Six contacts in series
(5) Cannot be used in combination with a Command Close Coil

Connections
The connection points of Auxiliary contacts can be found on the Auxiliary Disconnet Terminal of both the fixed pattern and draw-out Breaker types.

Envelope 1, 2 & 3
- Power rated contacts 3NO & 3NC
- Power rated contacts 8NO & 8NC
- Power rated contacts 3NO & 3NC Plus Signal rated contacts 2No & 2NC
- Power rated contacts 4NO & 4NC Plus Signal rated contacts 4NO & 4NC

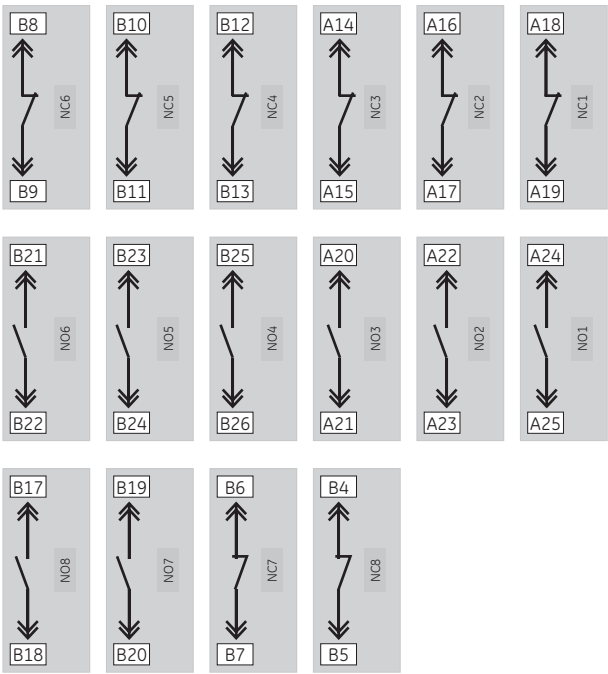

Envelope T
- Power rated contacts 3NO & 3NC
- Power rated contacts 4NO & 4NC (5)

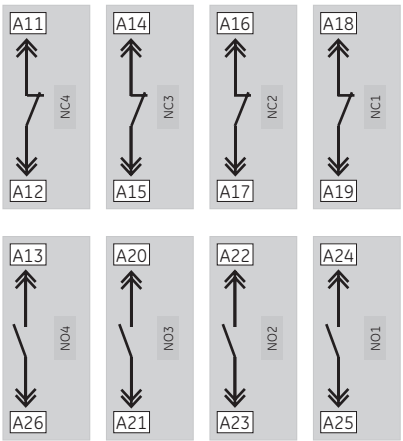

Unelec Equipment
www.unelec-equipment.com
Tel: +1 319 244 84 69 UeeS Co. Tel: +1 650 466 86 39
Info@unelec-equipment.com

Bell Alarm, Cassette position indication, Spring Charged & Ready to close contacts

Bell Alarm Contact

When an EntelliGuard™ Power Circuit Breaker has tripped due to a fault detected by the tripunit, a Bell Alarm Changeover contact is available to indicate this. The Electronic Trip Units trip reason indicators and the optional release indication contacts then providing the reason of the 'trip'.
The device is available with Power rated or signal rated contacts and are available as a factory mounted component or as a field mountable device.
The Bell Alarm contact is easy-to-fit, and has simple plug-in connectors. The contact can only be used when the knob on front of the trip unit is set to the manual position.

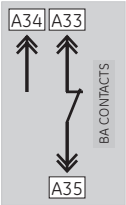

Connections

The connection points of the Bell Alarm contact can be found on terminal A of both the fixed pattern & draw-out Breaker types.

Electrical characteristics Bell Alarm Contact

AC Ratings		DC Ratings	
Voltage	Amps	Voltage	Amps
250V	AC21-6A	125V	DC21-0.4A
		250V	DC21-0.2A

Minimum Operating Current 0.1A at 8V DC

Signal Rated, gold plated contact types [1]

AC Ratings		DC Ratings	
Voltage	Amps	Voltage	Amps
125V	AC21-0.1A	8-30V	DC21-0.1A

Minimum Operating Current 0.1mA at 5V DC

Cassette Position Indication Contacts

A breaker in draw-out mode has a cassette that is used for mounting and connecting. The breaker, in its moving portion mode, can be inserted into the cassette and by use of the racking handle and it can be moved to one of three positions:

Connected, Test, Disconnected or Withdrawn

To indicate in which position the EntelliGuard™ Breaker is located within the Cassette position is Indication contacts are available. The disconnected position is only being indicated when minimum isolating distances between contacts on both the main and auxiliary circuits have been achieved. The devices are available in two packages with 1 or 2 changeover contacts per position.
Commonly referred to as Carriage switches they are available as a factory mounted component or as a field mountable device.

Connections

The device is located in the left side of the cassette substructure and can be accessed and connected directly.

Electrical characteristics Position Indication Contacts

AC Ratings		DC Ratings	
Voltage	Amps	Voltage	Amps
250V	AC21-10A	125V	DC21-0.5A
		250V	DC21-0.25A

Spring Charged and Ready to Close Contacts

A breaker with electrical charging mechanism can be optionally equipped with one or two indication contacts. The first the Spring Charged Contact simply does as indicated and is supplied with the standard Motor Operating Mechanism. The second, the ready to close indication, optionally replaces the Spring Charged Contact. It only moves position when the following conditions are met:

-> The circuit breaker is open
-> The closing springs are charged
-> The circuit breaker is not locked/interlocked in open position
-> There is no standing closing order
-> There is no standing opening order

Both contacts are availble in a 1NO configuration.

Connections

The connection points of these contacts can be found on terminal A of both the fixed pattern & draw-out Breaker types

OR

Electrical characteristics
Power Rated types

AC Ratings		DC Ratings	
Voltage	Amps	Voltage	Amps
250V	AC21-6A	125V	DC21-0.4A
		250V	DC21-0.2A

Minimum Operating Current 0.16A at 5V DC

Signal Rated, gold plated contact types [1]

AC Ratings		DC Ratings	
Voltage	Amps	Voltage	Amps
125V	AC21-0.1A	8-30V	DC21-0.1A

Minimum Operating Current 1mA at 5V DC

(1) Spring Charged contact NOT available in signal rated version

Unelec Equipment
www.unelec-equipment.com
Tel: +1 319 244 84 69 UeeS Co. Tel: +1 650 466 86 39
Info@unelec-equipment.com

Mechanical Interlocking of Multiple Breakers

Mechanically Interlocked Breakers[1]
Many Low Voltage Installations have multiple power sources that are used in many different configurations.
The power sources are required to supply the installation simultaneously, alternatively or in a certain logical combinations of both.

The EntelliGuard™ Power Circuit Breaker can be used to protect these Power supplies and be electrically and mechanically interlocked to provide the necessary logic.
The mechanical interlocks are available for fixed and draw-out circuit breakers, enabling the direct interlocking of the breakers, mounted side by side or stacked.

The device has two parts; the first a kit customized for use with the breaker in fixed pattern or the cassette when a draw-out pattern is required (field mountable). Two or more specially designed field mountable cables available in lengths of 1.0; 1.6; 2.0; 2.5; 3.0; 3.5 and 4.0 meters being the second.

Any combination mode (fixed or draw-out), current rating, number of poles or envelope size[1] can be interlocked. The interlocking systems are available in one configuration for 2 breakers and in three others for 3 breakers.

Two Breaker Interlock
Interlock type A in which one of the two breakers (B1 or B2) can be switched ON. Each breaker must be equipped with a factory mounted interlock type A. Two cables are needed.

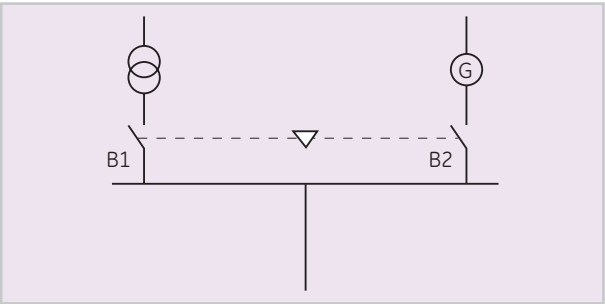

Three Breaker Interlock type B
Interlock type B in which one of the three breakers (B1, B2 or B3) can be switched ON. Each breaker must be equipped with a factory mounted interlock type B. Six cables are needed.

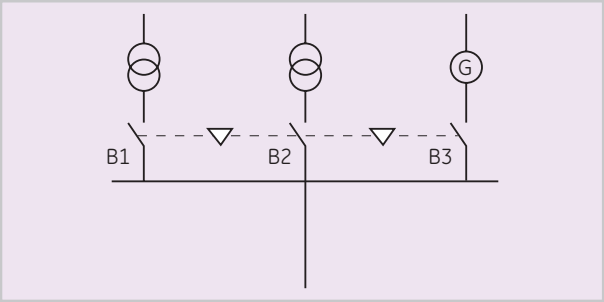

Three Breaker Interlock type C
Interlock type C in which one or two of the three breakers can be switched ON in accordance with the inserted diagram. Each breaker must be equipped with a factory mounted interlock type C. Six cables are needed.

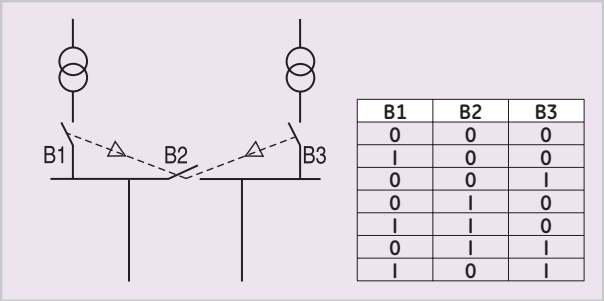

B1	B2	B3
0	0	0
I	0	0
0	0	I
0	I	0
I	I	0
0	I	I
I	0	I

Three Breaker Interlock type D
Interlock type D in which one or two of the three breakers can be switched ON in accordance with the inserted diagram. Breakers B1 & B3 must be equipped with a factory mounted interlock type A and B2 with a interlock type D. Four cables are needed.

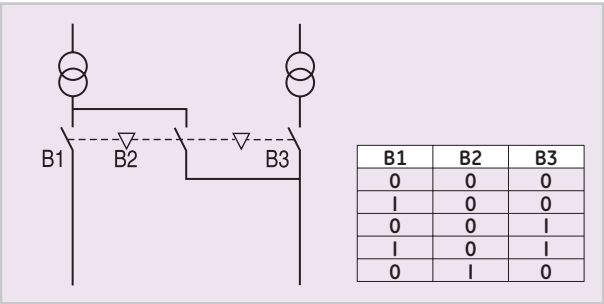

B1	B2	B3
0	0	0
I	0	0
0	0	I
I	0	I
0	I	0

(1) For Envelope T, only the combination in the same envelope size can be interlocked.

Unelec Equipment
www.unelec-equipment.com
Tel: +1 319 244 84 69 UeeS Co. Tel: +1 650 466 86 39
Info@unelec-equipment.com

Locking previsions for Breaker and Cassette Door-Interlock systems; Mis insertion device

Standard Padlocking facilities
Breaker & Cassette

EntelliGuard™ Power Circuit EntelliGuard™ Envelope 1, 2 & 3 breakers in Fixed and draw-out pattern have a standard padlocking facility.
For one padlock of 5-8mm allowing the breaker to be locked in it's "OFF" position.
For the Envelope T an acessory is available allowing the breaker to be locked in it's "OFF" position. This by a keylock or padlock of 5-8mm.

For all Envelopes, the cassette supplied with the breakers in draw-out mode has three facilities for up to 3 padlocks[1] of 5-8 mm. Two of these can be found on the cassette euchenon and can be used for locking the shutters in closed position or closing and locking the racking handle aperture. The third option is located on the breaker draw-out support slides and can be used to lock breaker & chassis combination in disconnected position.

Facia Pushbutton Padlocking facilities

To prevent un-authorized access to both the ON and OFF push buttons on the breakers front facia, a padlockable push button cover can be fixed to the breaker front facia. 1 padlock of 5-8mm can be used.

Breaker Key lock facilities

A Power Circuit breaker can be equipped with key locks. The key lock system encompasses a device fitted in the front facia allowing the locks to be fitted and the separate locks. These devices ensure that a circuit breaker cannot be closed unless the key has been inserted and secured within the lock.
For Envelopes 1, 2 & 3 devices are available for 1 Castell or Kirk lock or 4 Ronis 1104 or 4 Profalux locks.
For Envelope T, devices are available for 1 padlock and one Ronis 1104 or Profalux lock.
The separate Ronis and Profalux locks are part of the EntelliGuard™ product offering, but Padlocks and the Castell and Kirk locks must be acquired elsewhere.

(1) Shutter lock, maximum 1 padlock of 3-8 mm.
(2) The envelope T cassette can be equipped with maximum one Ronis or Profalux key locks

Cassette Key lock facilities[2]

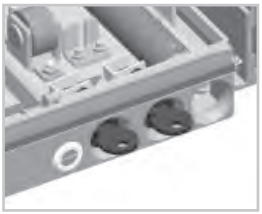

The Cassette of a Power Circuit breaker can be equipped with up to two Ronis or Profalux key locks. The key lock system encompasses a device fitted to the cassette allowing the locks and the separate locks to be fitted. The device ensures that a draw-out circuit breaker cannot be moved from the TEST or DISCONNECT position unless the key has been inserted and secured within the lock. The locks also prevent the breaker from (all positions) being switched on.
The device allows up to 2 Ronis 1104 or Profalux locks.
The locks must be purchased as separate items.

Door Interlock

A device designed to prevent the door of the equipment in which the breaker is installed to be opened when the Power Circuit breaker is in connected position. It is available in two executions; one for a door opening to the left and one to the right.

Mis insertion device

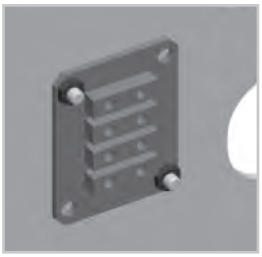

By incorporating this optional security interlock device into the draw-out cassette, an inadvertent insertion of an incorrect rated moving portion is prevented. Before using the interlocking system, the misinsertion logic needs to be set on both the breaker and the device.

Unelec Equipment
www.unelec-equipment.com
Tel: +1 319 244 84 69 UeeS Co. Tel: +1 650 466 86 39
Info@unelec-equipment.com

Installation Accessories

Operations Counter
A simple and easy to install mechanical device that displays an accurate and cumulative record of the number of closing operation of the EntelliGuard™ Power Circuit Breaker in which it is installed.

The mechnical and electrical life span of the breaker can be extended by limited periodic maintenance. The counter contains information that can assist in determening when.

Contact Wear Indicator[1]

A second simple and easy to install mechanical device that can be used to ascertain when breaker maintenance is needed. Mounted above the contacts of a breaker in draw-out mode it allows the user to physically see the contacts and contains markers to determine their wear.

Sensors, Rogowski coils
If the EntelliGuard™ Electronic Trip Unit is configured to allow Earth/Ground fault protection an external Neutral sensor can be required. Rogowski coils for this application are available as separate items and are supplied with a mounting kit.
For the correct sensor choice and application details see page B.13-B.15 of this catalogue.

Sensors, Current transformers
If the EntelliGuard™ Electronic Trip Unit is configured to allow Earth/Ground fault protection an external Neutral sensor can be required. In most standard applications a Rogowski coil suffices, however in some cases other Sensors are needed. Current Transformer are used for 'Source Ground' return Earthfault applications. If combinations of earthfault options as UEF, REF & SEF are required multiple sensors could be required.

Current Transformers for these application are available as separate item and are supplied with a mounting kit and an extra interposing Current Transformer needed in some specific cases.
For the correct sensor(s) choice and application details see page B.13-B.15 of this catalogue.

(1) Not available in Envelope T.

Wall Mounting Brackets [1]
EntelliGuard™ Power Circuit Breakers are designed to be mounted within a frame inside a low voltage Distribution or Control panel. In some cases, specifically when the front connection option is used, wall mounting can be more expedient.

For this purpose wall mounting brackets are available for the breakers in fixed pattern, envelope 1 and 2.

Terminal Block
Breakers in fixed pattern, cassettes and breakers in Draw-out mode are always supplied with an auxiliary connection block suitable for 39 connection points (terminal A). When the number of factory installed accessories exceeds the available number of connection points needed, a 2nd connection block is automatically added.
- Envelope 1, 2 & 3: 39 pole Block B
- Envelope T: 16 pole Block C

For cases where the accessories are mounted in the field, separate auxiliary connection block are available.
- Envelope 1, 2 & 3: A 78 block A plus B terminal for the fixed pattern and a 39 pole extra block B for breakers in draw-out pattern.
- Envelope T: A 16 pole Block C for all patterns

IP54 Cover[1]

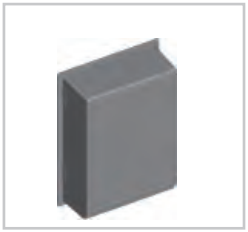

All Power Circuit Breakers are supplied with a door flange/door frame that allows the user to finish the door cut-out professionally, simultaneously providing a protection degree of IP31.
If a higher protection degree is required, an additional cover is available allowing IP54.

Hoisting/Lifting accessories

All EntelliGuard protection devices are equipped with a set of hoisting eyes (see page D.2). To use these hoisting eyes with standard lifting equipment specifically designed adaptors are available.
All EntelliGaurd Envelope T types are supplied with handling racks. (see page D.2)
For the Envelopes 1, 2 & 3 lifting beams are available.
One adaptor or beam is available for use with Envelope 1 & 2 (GLB1) and a second for use with the larger Envelope 3 breaker (GLB3).

Unelec Equipment
www.unelec-equipment.com
Tel: +1 319 244 84 69 UeeS Co. Tel: +1 650 466 86 39
Info@unelec-equipment.com

Earthing device (maintenance accessory) Spare Parts

Earthing Device[1]

To allow either the incoming cables or the busbar to be safely held at earthed potential and locked during system maintenance, all EntelliGuard™ Power Circuit Breakers can be fitted with an earthing device. The device is available as a separate field mountable accessory and has a Short-circuit rating equal to the short time withstand (Icw) of the breaker.

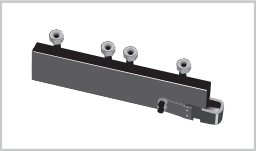

Spare parts for general use

The EntelliGuard™ Power Circuit breaker uses components that are designed to last the full life span of the device. However, certain components can be damaged or break during operational use. For these specific cases, the following spare parts are available:

Cassette: moving portion Racking Handle **(A)**
Shutters **(B)**
Breaker **(C)**: Front cover
Locking devices: Set of 4 Ronis key interlock cams

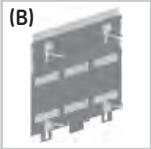

Spare part for maintenace purposes

Air Circuit Breakers as the EntellliGuard Power Circuit Breakers require periodic maintenance. Here, in some cases certain components critical to the devices functionality could need replacement.
Please contact our service department for specialist assistance in establishing which components need replacement and the physical replacement activities.
The following items are available:

- Arc Chutes **(A)**
- Fixed arcing Contacts **(B)**
- Cassette cluster contacts **(C)**
- Pliers to remove Cassette cluster contacts **(D)**

(1) Not available in Envelope T.

Unelec Equipment
www.unelec-equipment.com
Tel: +1 319 244 84 69 UeeS Co. Tel: +1 650 466 86 39
Info@unelec-equipment.com

Notes

Application Guide

D.2 Handling, Mounting and Connecting

D.4 Heat Dissipation, Watt loss & Current Ratings at temperatures >50°C

D.6 Selectivity/Discrimination

D.7 Selectivity with downstream devices, tables

D.8 Protection of standard circuits

D.9 Applications

D.10 Environmental considerations

Unelec Equipment

www.unelec-equipment.com

Tel: +1 319 244 84 69 UeeS Co. Tel: +1 650 466 86 39

Info@unelec-equipment.com

Handling, Mounting and Connecting

Clearance distances

A modern circuiit breaker is designed to interrupt high Short-circuit currents in a very limted time frame. In doing so the breaker vents gas and a limited amount of conductive fragments.
EntelliGuard™ Power Circuit Breakers have been designed to limit the venting phenomenon to a minimum, but certain clearances do need to be taken into account as indicated in the front and side views.
The maintenance of the fixed pattern devices requires access to the contacts and the removal of the Arc Chutes. A certain distance needs to be left above the breaker to allow for this as indicated in the front and side views.

Minimum Clearance distances on fixed pattern breaker from housing to:		
	Metal Parts	Insulated parts
A[1]	160	160
B1	30	30
B2	30	30
Minimum Clearance distances from Draw-out cassette housing to:		
	Metal Parts	Insulated parts
A	0	0
B1	30	30
B2	30	30

(1) Dimension allows for field Arc Chute replacements

Handling

EntelliGuard™ Envelope T Breakers in the fixed pattern & draw-out patterns are provided with the Lifting racks. To handle the breaker attach the racks between the 2 holes lifting eyes.
EntelliGuard™ Envelope 1, 2 & 3 Breakers in the fixed pattern & draw-out portion have two retractable lifting eyes. One of these is located on the breaker right hand side and a 2nd on the left (see sketch).
The cassettes have four re-enforced tilting points with M10 screw thread.

Envelope T

Side View Fixed or Draw-out Type

Envelope 1 & 2 & 3

Side View Fixed or Draw-out Type

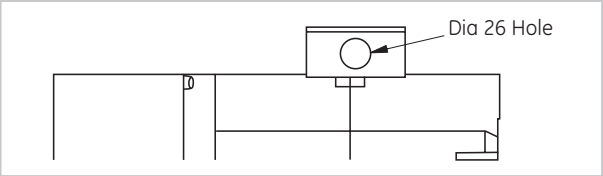

Front View Fixed or Draw-out pattern

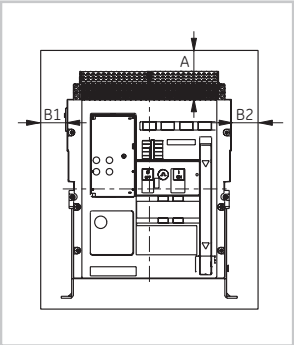

Side View Fixed pattern

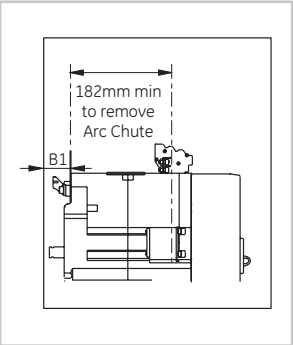

Recommended Connection Cross sections

The adjacent table indicates the recommended bus bar dimensions to be used in connecting the EntelliGuard™ Power Circuit Breaker. The current ratings of the devices with these recommended bus bar connection sizes are indicated on page D.3 & D.4.

Breaker type 'Automatic'	Switch Type 'Non Automatic'	Envelope	In in A	Recommended Copper Bus Bar sizes
GT04R & K	G704R	T	400	2 x 30 x 5
GG04, S N & H	GJ04S & GW04N	1 or 2		1 x 40 x 10 or 1 x 80 x 5 or 2 x 40 x 5
GG04 E and M	GJ04H			
GT07R & K	G707R	T	630	2 x 40 x 5
GG07S, N & H	GJ07S & GW07N	1 or 2		1 x 50 x 10 or 1 x 100 x 5 or 2 x 50 x 5
GG07 E and M	GJ07H			
GT08R & K	G708R	T	800	2 x 40 x 5
GG08S N & H	GJ08S & GW08N	1 or 2		1 x 50 x 10 or 1 x 100 x 5 or 2 x 50 x 5
GG08 E and M	GJ08H			
GT10R & K	G710R	T	1000	3 x 40 x 5
GG10S, N & H	GJ10S & GW10N	1 or 2		1 x 60 x 10 or 2 x 60 x 5
GG10 E and M	GJ10H			
GT13R & K	G713, R & K	T	1250	4 x 40 x 5
GG13S N & H	GJ13S & GW13N	1 or 2		2 x 40 x 10 or 2 x 80 x 5
GG13 E and M	GJ13H			
GT16R & K	G716R	T	1600	4 x 50 x 5
GG16S, N & H	GJ16S & GW16N	1		2 x 50 x 10 or 2 x 100 x 5
GG16 E and M	GJ16H	2		
GG20, S N & H	GJ20S & GW20N	1	2000	3 x 50 x 10 or 3 x 100 x 5
GG20 E and M	GJ20H	2		
GG25N, H & M	GJ25N & GW25H	2	2500	4 x 50 x 10 or 4 x 100 x 5
GG32N, H & M	GJ32N & GW32H	2 or 3	3200	4 x 100 x 10
GH32N, H & M	GK32N & GZ32H			
GG32G & L	GJ32G			
GG40N, H & M	GJ40N & GW40H	2	4000	4 x 100 x 10 Plus 1 x 100 x 5
GH40N, H & M	GK40N & GZ40H			
GG40G & L	GJ40G	3	4000	4 x 100 x 10
GG50M & L	CJ50L	3	5000	5 x 120 x 10 or 6 x 100 x 10
GG64M & L	CJ64L	3	6400	7 x 120 x 10 or 8 x 100 x 10

Unelec Equipment
www.unelec-equipment.com
Tel: +1 319 244 84 69 UeeS Co. Tel: +1 650 466 86 39
Info@unelec-equipment.com

Handling, Mounting and Connecting

Envelope T connection modes and application

Fixed pattern
R&K type 400-1600A Rear Horizontal

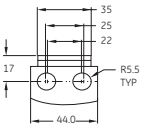

38-42 Nm

A	2x M10 x 60 -8.8
B	4x M10
C	4x M10
D	2x M10 -8.8

Fixed pattern
R&K type 400-1600A Rear Vertical

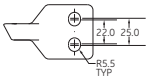

38-42 Nm

A	2x M10 x 60 -8.8
B	4x M10
C	4x M10
D	2x M10 -8.8

Fixed pattern
R&K type 400-1600A Front

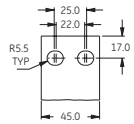

38-42 Nm

A	2x M10 x 60 -8.8
B	4x M10
C	4x M10
D	2x M10 -8.8

Draw-out pattern
R&K type 400-1600A Rear Horizontal or Vertical

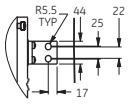

38-42 Nm

A	2x M10 x 60 -8.8
B	4x M10
C	4x M10
D	2x M10 -8.8

Draw-out pattern
R&K type 400-1600A Rear Horizontal

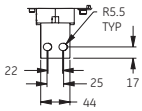

38-42 Nm

A	2x M10 x 60 -8.8
B	4x M10
C	4x M10
D	2x M10 -8.8

Draw-out pattern
R&K type 400-1600A Front

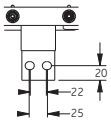

38-42 Nm

A	2x M10 x 60 -8.8
B	4x M10
C	4x M10
D	2x M10 -8.8

Envelope 1 connection modes and application

Fixed pattern
S type 400-1600A Rear Horizontal

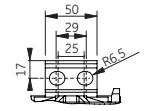

38-42 Nm

A	2x M10 x 60 -8.8
B	4x M10
C	4x M10
D	2x M10 -8.8

Fixed pattern
400-2000A Rear Vertical

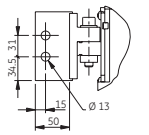

38-42 Nm

A	2x M10 x 60 -8.8
B	4x M10
C	4x M10
D	2x M10 -8.8

Draw-out pattern
S type 2000A, N & H 400-2000A

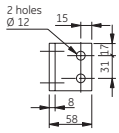

38-42 Nm

A	2x M10 x 60 -8.8
B	4x M10
C	4x M10
D	2x M10 -8.8

Fixed pattern
N & H type 400-1600A Rear Horizontal

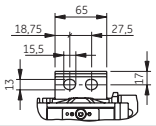

38-42 Nm

A	2x M10 x 60 -8.8
B	4x M10
C	4x M10
D	2x M10 -8.8

Fixed pattern
400-2000A Front

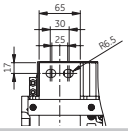

38-42 Nm

A	2x M10 x 60 -8.8
B	4x M10
C	4x M10
D	2x M10 -8.8

Draw-out pattern
400-1600A Front

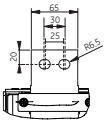

38-42 Nm

A	2x M10 x 60 -8.8
B	4x M10
C	4x M10
D	2x M10 -8.8

Fixed pattern
2000A Rear Horizontal

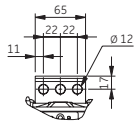

38-42 Nm

A	3x M10x60 - 8.8
B	6x M10
C	6x M10
D	3x M10 - 8.8

Draw-out pattern
S type 400-1600A Rear Vertical or Horizontal

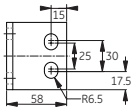

38-42 Nm

A	3x M10x60 - 8.8
B	6x M10
C	6x M10
D	3x M10 - 8.8

Draw-out pattern
2000A Front

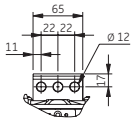

38-42 Nm

A	3x M10x60 - 8.8
B	6x M10
C	6x M10
D	3x M10 - 8.8

Envelope 2 connection modes and application

Fixed pattern
400-4000A Rear Horizontal or Vertical

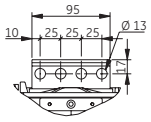

50-60 Nm

A	4x M12x60/90 - 8.8
B	8x M12
C	8x M12
D	4x M12 - 8.8

Draw-out pattern
400-3200A Rear Vertical or Horizontal

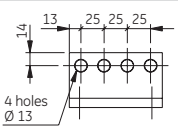

50-60 Nm

A	4x M12x60/90 - 8.8
B	8x M12
C	8x M12
D	4x M12 - 8.8

Draw-out pattern
400-4000A Front

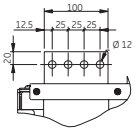

50-60 Nm

A	4x M12x60/90 - 8.8
B	8x M12
C	8x M12
D	4x M12 - 8.8

Fixed pattern
400-4000A Front

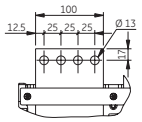

50-60 Nm

A	4x M12x60/90 - 8.8
B	8x M12
C	8x M12
D	4x M12 - 8.8

Draw-out pattern
4000A Rear Vertical ONLY

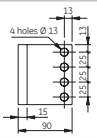

50-60 Nm

A	4x M12x60/90 - 8.8
B	8x M12
C	8x M12
D	4x M12 - 8.8

Draw-out pattern - enhanced thermal rated version
3200 & 4000A Rear Vertical ONLY

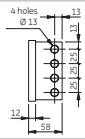

50-60 Nm

A	4x M12x60/90 - 8.8
B	8x M12
C	8x M12
D	4x M12 - 8.8

Envelope 3 connection modes and application

Fixed pattern
4000-5000A Rear Horizontal

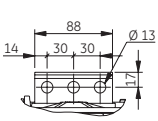

50-60 Nm

A	3x M12x60/80 - 8.8
B	6x M12
C	6x M12
D	3x M12 - 8.8

Draw-out pattern 4000-5000A Rear Horizontal -OR- 4000 -6400A Rear Vertical [1]

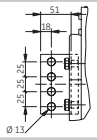

50-60 Nm

A	3x M12x60/80 - 8.8
B	6x M12
C	6x M12
D	3x M12 - 8.8

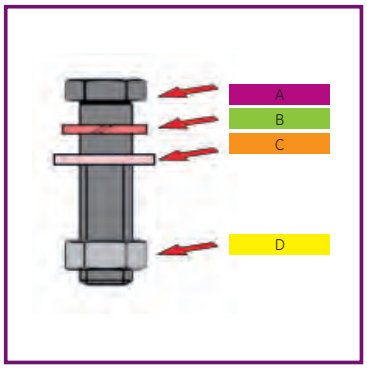

Fixed pattern
4000-6400A Rear Vertical

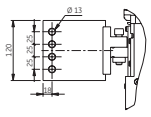

50-60 Nm

A	4x M12x60/90 - 8.8
B	8x M12
C	8x M12
D	4x M12 - 8.8

(1) The envelope 3 draw-out pattern construction has two connection pads per connection point.

Heat Dissipation, Watt loss & Current Ratings at temperatures >50°C

Standards
The standard for low voltage equipment is defined in the EN 60439-1, the EN 50298 and the IEC 60890. These provide a theoretical method to calculate the temperature rise within an enclosure. The main element in these calculations is the power dissipation of the equipment installed. By totalizing this value for all the installed devices, connections, cables and busbars it is possible to calculate the temperature rise within the enclosure. For normal applications a temperature rise within the enclosure of 50 Kelvin is assumed.

Use
An enclosure manufacturer can provide the exact data on the allowable power dissipation within a certain enclosure. The values depend on the enclosure type, the ventilation it offers and where the components are located within this enclosure.

EntelliGuard™ Power Circuit breakers
The devices have been designed to offer the lowest, feasible heat dissipation value and the highest possible current ratings when enclosed. The tables here indicate the heat dissipation values and current ratings at temperatures within the direct vicinty of the breaker in free air.
The values apply for breakers used with rear connections and the preferred vertical busbars. The recommended connection cross sections and busbar sizes can be found on page D.2.

Breaker type 'Automatic'	Switch Type 'Non Automatic'	Envelope	In in A	Power loss at In per pole (W)	Temperature in the direct environment of the EntelliGuard				
					≤50°C	55°C	60°C	65°C	70°C
					Maximum user Current Ie in A Vertical connection mode: fixed pattern				
GT04R & K	G704R	T	400	4.6	400	400	400	400	400
GG04S N & H	GJ04S & GW04N	1	400	2.29	400	400	400	400	400
GG04 E and M	GJ04H	2	400	1.66	400	400	400	400	400
GT07R &K	G707R	T	630	11.8	630	630	630	630	630
GG07S N & H	GJ07S & GW07N	1	630	5.68	630	630	630	630	630
GG07 E and M	GJ07H	2	630	4.13	630	630	630	630	630
GT08K & R	G708R	T	800	19.2	800	800	800	800	800
GG08, S N & H	GJ08S & GW08N	1	800	9.15	800	800	800	800	800
GG08 E and M	GJ08H	2	800	6.66	800	800	800	800	800
GT10R & K	G710R	T	1000	30	1000	1000	1000	1000	1000
GG10S N & H	GJ10S & GW10N	1	1000	14.3	1000	1000	1000	1000	1000
GG10 E and M	GJ10H	2	1000	10.4	1000	1000	1000	1000	1000
GT13R & K	G713R	T	1250	46.9	1250	1250	1250	1250	1250
GG13, S N & H	GJ13S & GW13N	1	1250	22.3	1250	1250	1250	1250	1250
GG13 E and M	GJ13H	2	1250	16.3	1250	1250	1250	1250	1250
GT16R & K	G716R	T	1600	66.6	1600	1600	1600	1600	1600
GG16S N & H	GJ16S & GW16N	1	1600	36.6	1600	1600	1600	1600	1600
GG16 E and M	GJ16H	2	1600	26.6	1600	1600	1600	1600	1600
GG20, S N & H	GJ20S & GW20N	1	2000	57.2	2000	2000	2000	2000	2000
GG20 E and M	GJ20H	2	2000	41.6	2000	2000	2000	2000	2000
GG25N, H & M	GJ25N & GW25H	2	2500	65.0	2500	2500	2500	2500	2500
GG32N, H & M	GJ32N & GW32H	2	3200	106	3200	3200	3200	3150	3100
GG32G & L	GJ32G	3	3200	66.6	3200	3200	3200	3200	3200
GG40N, H & M	GJ40N & GW40H	2	4000	166	4000	3750	3600	3500	3400
GG40G & L	GJ40G	3	4000	104	4000	4000	4000	4000	4000
GG50M & L	GJ50L	3	5000	163	5000	5000	5000	4900	4800
GG64M & L	GJ64L	3	6400	266	6400	6300	6200	6100	6000
					Maximum user Current Ie in A Vertical connection mode: Draw-out types				
GT04R & K	G704R	T	400	8.8	400	400	400	400	400
GG04S N & H	GJ04S & GW04N	1	400	4.78	400	400	400	400	400
GG04 E and M	GJ04H	2	400	3.74	400	400	400	400	400
GT07R & K	G707R	T	630	21.8	630	630	630	630	630
GG07S N & H	GJ07S & GW07N	1	630	11.9	630	630	630	630	630
GG07 E and M	GJ07H	2	630	9.29	630	630	630	630	630
GT08R & K	G708R	T	800	35.2	800	800	800	800	800
GG08S N & H	GJ08S & GW08N	1	800	19.1	800	800	800	800	800
GG08 E and M	GJ08H	2	800	15.0	800	800	800	800	800
GT10R & K	G710R	T	1000	55	1000	1000	1000	1000	1000
GG10S N & H	GJ10S & GW10N	1	1000	29.9	1000	1000	1000	1000	1000
GG10 E and M	GJ10H	2	1000	23.4	1000	1000	1000	1000	1000
GT13R & K	G713R	T	1250	85.9	1250	1250	1250	1250	1250
GG13S N & H	GJ13S & GW13N	1	1250	46.7	1250	1250	1250	1250	1250
GG13 E and M	GJ13H	2	1250	36.6	1250	1250	1250	1250	1250
GT16R & K	G716R	T	1600	128	1600	1500	1450	1400	1350
GG16S N & H	GJ16S & GW16N	1	1600	76.5	1600	1600	1600	1600	1600
GG16 E and M	GJ16H	2	1600	59.9	1600	1600	1600	1600	1600
GG20S N & H	GJ20S & GW20N	1	2000	120	2000	2000	2000	2000	2000
GG20 E and M	GJ20H	2	2000	93.6	2000	2000	2000	2000	2000
GG25N, H & M	GJ25N & GW25H	2	2500	146	2500	2500	2500	2500	2500
GG32N, H & M	GJ32N & GW32H	2	3200	240	3200	3200	3200	3100	3000
GH32N, H & M	GK32N & GZ32H	2	3200	186	3200	3200	3200	3200	3200
GG32G & L	GJ32G	3	3200	106	3200	3200	3200	3200	3200
GG40N, H & M	GJ40N & GW40H	2	4000	374	3800	3700	3600	3500	3400
GH40N, H & M	GK40N & GZ40H	2	4000	291	4000	3950	3900	3835	3750
GG40G & L	GJ40G	3	4000	166	4000	4000	4000	4000	4000
GG50M & L	GJ50L	3	5000	260	5000	5000	5000	4900	4800
GG64M & L	GJ64L	3	6400	426	6400	6300	6200	6100	6000

Heat Dissipation, Watt loss & Current Ratings at temperatures >50°C

EntelliGuard™ Power Circuit breakers

Other connection modes as rear connection with horizontal busbars and connection from the breaker front are possible. The tables here indicate the heat dissipation values and current ratings at temperatures within the direct vicinty of the breaker in free air.

The values apply for breakers used in rear connection mode with horizontal busbar connection and for devices with front connection.

The recommended connection cross sections and busbar sizes can be found on page D.2.

Breaker type 'Automatic'	Switch Type 'Non Automatic'	Envelope	In in A	Power loss at In per pole (W)	Temperature in the direct environment of the EntelliGuard				
					≤50°C	55°C	60°C	65°C	70°C
					Maximum user Current Ie in A Horizontal or Front[2] connection mode: fixed pattern				
GT04R & K	G704R	T	400	4.6	400	400	400	400	400
GG04S N & H	GJ04S & GW04N	1	400	2.29	400	400	400	400	400
GG04 E and M	GJ04H	2	400	1.66	400	400	400	400	400
GT07R & K	G707R	T	630	11.8	630	630	630	630	630
GG07S N & H	GJ07S & GW07N	1	630	5.68	630	630	630	630	630
GG07 E and M	GJ07H	2	630	4.13	630	630	630	630	630
GT08R & K	G708R	T	800	19.2	800	800	800	800	800
GG08S N & H	GJ08S & GW08N	1	800	9.15	800	800	800	800	800
GG08 E and M	GJ08H	2	800	6.66	800	800	800	800	800
GT10R & K	G710R	T	1000	30	1000	1000	1000	1000	1000
GG10S N & H	GJ10S & GW10N	1	1000	14.3	1000	1000	1000	1000	1000
GG10 E and M	GJ10H	2	1000	10.4	1000	1000	1000	1000	1000
GT13R & K	G713R	T	1250	46.9	1250	1250	1250	1250	1250
GG13, S N & H	GJ13S & GW13N	1	1250	22.3	1250	1250	1250	1250	1250
GG13 E and M	GJ13H	2	1250	16.3	1250	1250	1250	1250	1250
GT16R & K	G716R	T	1600	66.6	1600	1500	1450	1400	1350
GG16S N & H	GJ16S & GW16N	1	1600	36.6	1600	1600	1600	1600	1600
GG16 E and M	GJ16H	2	1600	26.6	1600	1600	1600	1600	1600
GG20, S N & H	GJ20S & GW20N	1	2000	57.2	2000	2000	2000	2000	2000
GG20 E and M	GJ20H	2	2000	41.6	2000	2000	2000	2000	2000
GG25N, H & M	GJ25N & GW25H	2	2500	65.0	2500	2500	2500	2500	2500
GG32N, H & M	GJ32N & GW32H	2	3200	106	3200	3200	3100	3050	3000
GG32G & L	GJ32G	3	3200	66.6	3200	3200	3200	3200	3200
GG40N, H & M -RH	GJ40N & GW40H-RH	2	(1)	(1)	(1)	(1)	(1)	(1)	(1)
GG40N, H & M-FC	GJ40N & GW40H-FC	2	4000	166	4000	3700	3400	3200	3000
GG40G & L	GJ40G	3	4000	104	4000	4000	4000	4000	4000
GG50M & L	GJ50L	3	5000	163	5000	5000	5000	4875	4750
GG64M & L	GJ64L	3	(1)	(1)	(1)	(1)	(1)	(1)	(1)
					Maximum user Current Ie in A Horizontal or Front[2] connection mode: Draw-out types				
GT04R & K	G704R	T	400	8.8	400	400	400	400	400
GG04S N & H	GJ04S & GW04N	1	400	4.8	400	400	400	400	400
GG04 E and M	GJ04H	2	400	3.74	400	400	400	400	400
GT07K	G707R	T	630	21.8	630	630	630	630	630
GG07S N & H	GJ07S & GW07N	1	630	11.9	630	630	630	630	630
GG07 E and M	GJ07H	2	630	9.3	630	630	630	630	630
GT08R & K	G708R	T	800	35.2	800	800	800	800	800
GG08S N & H	GJ08S & GW08N	1	800	19.1	800	800	800	800	800
GG08 E and M	GJ08H	2	800	15.0	800	800	800	800	800
GT10R & K	G710R	T	1000	55	1000	1000	1000	1000	1000
GG10S N & H	GJ10S & GW10N	1	1000	29.9	1000	1000	1000	1000	1000
GG10 E and M	GJ10H	2	1000	23.4	1000	1000	1000	1000	1000
GT13R & K	G713R	T	1250	85.9	1250	1250	1250	1250	1250
GG13S N & H	GJ13S & GW13N	1	1250	47	1250	1250	1250	1250	1250
GG13 E and M	GJ13H	2	1250	36.6	1250	1250	1250	1250	1250
GT16R & K	G716R	T	1600	128	1600	1500	1400	1350	1250
GG16S N & H	GJ16S & GW16N	1	1600	77	1600	1600	1600	1600	1600
GG16 E and M	GJ16H	2	1600	60	1600	1600	1600	1600	1600
GG20S N & H	GJ20S & GW20N	1	2000	120	2000	2000	2000	2000	2000
GG20 E and M	GJ20H	2	2000	94	2000	2000	2000	2000	2000
GG25N, H & M	GJ25N & GW25H	2	2500	146	2500	2500	2500	2500	2500
GG32N, H & M	GJ32N & GW32H	2	3200	240	3200	3200	3200	3200	2900
GH32N, H & M	GK32N & GZ32H	2	3200	186	3200	3200	3200	3200	3000
GG32G & L	GJ32G	3	3200	106	3200	3200	3200	3200	3200
GG40N, H & M -RH	GJ40N & GW40H-RH	2	(1)	(1)	(1)	(1)	(1)	(1)	(1)
GG40N, H & M-FC	GJ40N & GW40H-FC	2	4000	374	4000	3700	3400	3200	3000
GH40N, H & M	GK40N & GZ40H	2	(1)	(1)	(1)	(1)	(1)	(1)	(1)
GG40G & L	GJ40G	3	4000	166	4000	4000	4000	4000	4000
GG50M & L	GJ50L	3	5000	260	5000	5000	5000	4850	4700
GG64M & L	GJ64L	3	(1)	(1)	(1)	(1)	(1)	(1)	(1)

(1) Rear horizontal connections cannot be used at this current rating
(2) Front connections are available for the standard envelope 1 and envelope 2 types (not available for GH,GK and GZ types)

Selectivity/Discrimination

Selectivity - Discrimination
In a low voltage distribution network it is necessary that on a fault the protection device nearest to the fault reacts whilst all others remain closed.
This capability is called discrimination (UK) or Selectivity (USA and Europe).
If this requirement is not met a fault in one arm of the distribution system could cause a number of upstream protection devices to react and open. A relatively minor fault in one arm of a complete distribution will then cause a power interruption across a major part of the installation.

EntelliGuard™ Power Circuit breakers
A combination of the high precision and multiple bands of the EntelliGuard™ Electronic Trip Unit allow full selectivity to be achieved between closely rated devices over multiple levels.
The table included here indicates the recommended settings of the downstream protection devices and the upstream EntelliGuard™ breaker.
A second table on page D.6 indicates the discrimination / selectivity that can be achieved with these settings.
The tables can replace the Complex and Time consuming method of comparing multiple Time Current curves across many levels.

Downstream Device	Trip Unit	Setting Denomination	Settings determining selectivity	Recommended EntelliGuard™ settings				
				Ir or Ie setting Ratio	LTDB setting band	Ist setting Ratio	STDB setting band	I setting
Record Plus								
FD & FE frame	LTMD	Ir	Ratio & Band	1.6 x	C22			*Minimum setting 5kA -FD160, 7kA - FE160, 9kA - FE250 or I = 'OFF'*
		Im	Ratio & Band			1.6 x	Band 2	
FD & FE frame	GTM	Ir	Ratio & Band	1.6 x	C22			
		Im	Ratio & Band			1.6 x	Band 2	
FE frame	PremEon	Ir	Ratio & Band	1.3 x				
		LTD line	Band		C8			
		LTD Motor	Band		C14			
		Ist	Ratio & Band			1.35 x	Band 2	
FG frame	PremEon	Ir	Ratio & Band	1.3 x				*Minimum setting 14kA -FG400, 18kA - FG630 or use ZSI or I = 'OFF'*
		LTD line	Band		C8			
		LTD Motor	Band		C14			
		Ist	Ratio & Band			1.35 x	Band 3	
FG frame	SMR2	Ir	Ratio	1.3 x				
		LTD cl.1.25	Band		C3			
		LTD cl. 2.5	Band		C5			
		LTD cl. 5	Band		C8			
		LTD cl.10	Band		C12			
		LTD cl.20	Band		C16			
		LTD cl.30	Band		C18			
		Ist	Ratio			1.35 x		
		STD=420ms	Band				Band 13	
		STD=310ms	Band				Band 11	
		STD=210ms	Band				Band 9	
		STD=120ms	Band				Band 6	
		STD=40ms	Band				Band 3	
FK frame	SMR1e	Ir	Ratio & Band	1.4 x	C8			*Minimum setting 18kA -FK800 20kA - FK1000 20kA - FK1250 28kA - FK1600 or use ZSI or I = 'OFF'*
		Ist	Ratio			1.35 x		
		STD	Band				Band 7	
FK frame	SMR1s	Ir	Ratio	1.4 x				
		LTD cl. 5	Band		C8			
		LTD cl.10	Band		C12			
		LTD cl.20	Band		C19			
		LTD cl.30	Band		C22			
		Ist	Ratio					
		STD=300ms	Band				Band 12	
		STD=200ms	Band				Band 10	
		STD=100ms	Band				Band 7	
EntelliGuard	GT-E	Ir	Ratio	1.25 x				*Use ZSI or I = 'OFF'*
		LTD class	Band		2 higher			
		Ist	Ratio			1.25 x		
		STD band min. until 11	Band				2 higher	
		STD band ≤12					1 higher	
EntelliGuard	GT-S, N & H	Ir	Ratio	1.25 x				
		LTD class	Band		2 higher			
		Ist	Ratio			1.25 x		
		STD band min. until 11	Band				2 higher	
		STD band ≤12					1 higher	
Industrial fuses GL/Gg type	----	Current rating	Ratio & Band	2 x	F20	ST = 8 x Ir, STDB band 5 and I = 12 x Ie		

Unelec Equipment
www.unelec-equipment.com
Tel: +1 319 244 84 69 UeeS Co. Tel: +1 650 466 86 39
Info@unelec-equipment.com

Selectivity with downstream devices, tables

Downstream Device	Trip Unit	Upstream EntelliGuard™ device and Selectivity limit Is [1]										
		GT04R to GT16R	GT04K to GT16K	GG04S to GG20S	GG04N to GG20N	GG25N to GG40N	GG04E to GG20E	GG(H)25H to GG(H)40H	GG(H)25M to GG(H)40M	GG32G to GG40G	GG40M to GG64M	GG40L to GG64L
Elfa Plus MCB's EP30, 45, 60, 100 & 250, CP30, 45 & 60, DME60, DPE100, DP(A)60, DP(A)100 & DPT100	All	T	T	T	T	T	T	T	T	T	T	T
Elfa Plus MCB's HTI & S90 C curve	All	T	T	T	T	T	T	T	T	T	T	T
Surion Manul Motor starters GPS1BS ≤ 10A GPS1MH ≤ 12.5A GPS2BS 10A, GPS2MH 10A	All	T	T	T	T	T	T	T	T	T	T	T
Surion Manul Motor starters GPS1BS, GPS1MS 12.5kA, GPS1MH > 12.5A GPS2MH >10A	All	T	T	T	T	T	T	T	T	T	T	T
Surion Manul Motor starters GPS1BS, GPS1MS ≥16A, GPS2BS >10A	All	T	T	T	T	T	T	T	T	T	T	T
Record Plus												
FD & FE frame C, E, V, S tiers	All	T	T	T	T	T	T	T	T	T	T	T
FD & FE frame N tier	All	T	T	T	T	T	T	T	T	T	T	T
FD & FE frame H tier	All	T	T	T	T	T	T	T	T	T	T	T
FD & FE frame L tier	All	T	T	T	T	T	T	T	T	T	T	T
FG frame N tier	All	T	T	T	T	T	T	T	T	T	T	T
FG frame H tier	All	T	T	T	T	T	T	T	T	T	T	T
FG frame L tier	All	T	T	T	T	T	T	T	T	T	T	T
FK frame N tier	All	T	T	T	T	T	T	T	T	T	T	T
FK frame H tier	All	T	T	T	T	T	T	T	T	T	T	T
FK frame L tier	All	T	T	T	T	T	T	T	T	T	T	T
EntelliGuard												
GT04R to GT16R	All	42kA[2]	T									
GT04K to GT16K	All	42kA[2]	50kA[2]									
GG04S to GG20S	All	--	--	50kA[2]	T	T	T	T	T	T	T	T
GG04N to GG20N	All	--	--	50kA[2]	65kA[2]	65kA[2]	T	T	T	T	T	T
GG04E to GG20E	All	--	--	50kA[2]	65kA[2]	65kA[2]	85kA[2]	85kA[2]	85kA[2]	T	T	T
GG(H)25H to GG(H)40H	All	--	--	--	--	65kA[2]	--	85kA[2]	85kA[2]	T	T	T
GG(H)25M to GG(H)40M	All	--	--	--	--	65kA[2]	--	85kA[2]	85kA[2]	T	T	T
GG(H)40M to GG(H)64M	All	--	--	--	--	--	--	--	--	--	100kA[2]	100kA[2]
GG(H)40L to GG(H)64L	All	--	--	--	--	--	--	--	--	--	100kA[2]	100kA[2]
Industrial fuses GL/Gg type	----	T	T	T	T	T	T	T	T	T	T	T

(1) T = Full selectivity until the Icu of the downstream or upstream device (the lowest of the two)
(2) Indicated values apply with I (Instantaneous) ON, If Off reduce by 10%

Unelec Equipment
www.unelec-equipment.com
Tel: +1 319 244 84 69 UeeS Co. Tel: +1 650 466 86 39
Info@unelec-equipment.com

Protection of standard Circuits[1]

Protection of Standard Circuits
Protection devices as the EntelliGuard™ Power Circuit breaker are used in a wide variety of environments to protect conductors, equipment and devices in low voltage distribution circuits. To use this product to its full potential it is necessary to verify that it functions correctly in the environment in which it is used, and that it meets the Electrotechnical requirements of the circuit it protects.

Environment
EntelliGuard™ will function well in almost any industrial environment and fully complies with the environmental requirements of the relevant EN 60 947-2 standard.
For conditions other than the above mentioned, please refer to page D.9 of this section.

Maximum Short-Circuit Current
Each protective device must be capable of interrupting the maximum Short-circuit current at the point where it is installed (see HD 384 standard). The interruption ratings (Breaking Capacities) of the EntelliGuard™ circuit breaker can be found on pages 2, 3 & 4 of this catalogue.

Design Current of a circuit
The equipment and devices in an electrical circuit determine its current load or design current Ib.
A circuit breaker's overload or Ir setting is normally adjusted to a value equal to the design current.

Weakest Short-circuit current in a circuit
On a Short-circuit event the total circuit impedance determines both the MAXIMUM and WEAKEST Short-circuit current that can flow in the circuit.
For the weakest short circuit current it is necessary to establish if the protection device trips before the electrical conductors reach their maximum temperature, this for operating times of 0.1 to 5 seconds.

Fault Currents
In the 2005 edition of the IEC 60364-4-41 the general terminology 'Protection against Electrical shock' has been adapted whilst two new terms have been introduced:

1) Protection under normal conditions now designated:
   Basic Protection
2) Protection under fault conditions now designated:
   Fault protection

Fault protection being provided by protective equipotential bonding and automatic disconnection of the supply. Under fault conditions, depending on the network an interruption time of 5 seconds (TN) or 1 second is required (TT) for circuits with a rating >32A. Depending on the configuration of the earthing system the 1 and 5 second disconnection time is also required for interruption of a second fault in IT systems.

EntelliGuard™ Power Circuit breakers
To protect standard circuits, the breakers are equipped with a number of protection devices.

Overload Protection device
The first is a highly accurate menu driven overload protection device that has an adjustment range of 0.2 to 1 x the breaker rating. Six main current ratings (Ie) are available. Each have a sub setting (Ir) of 0.5 to 1 times the chosen Ie rating.
This device is normally set to a value that is equal or closely matches the design current (Ib).

Timed Short-circuit Protection Device
Set as a multiple of the overload adjustment. this device offers a broad adjustment range of 2 to 12.
The setting of this device depends on several parameters as the inrush characteristics of the protected devices.
a protection against the **weakest Short-circuit current** and in some cases against fault currents to earth.
17 narrow and accurate time bands allow the EntelliGuard™ Power Circuit Breaker to interrupt a fault within the timing required by the standards. to offer selectivity across multiple levels and allow the user to take inrush currents into account.

Ground Fault Protection
It is possible to combine two devices in one. both designed to detect **Fault Currents** to earth. They can be set as a multiple of the value of the Current Sensors mounted in the breaker and have a broad adjustment range of 0.2 to 1 (0.1 -1 with an auxiliary power supply).
The first is a residual device that takes the sum of the current in the three phases and neutral. If this is no longer equal to zero it sends an alarm or trips the breaker.
The second allows the user to measure the return current running between the Earth leg and neutral. On detecting a fault to earth the device sends an alarm, or trips the breaker.
14 narrow and accurate time bands allow the EntelliGuard™ G Power Circuit Breaker to interrupt a fault within the timing required by the standards and offer selectivity across multiple levels.

Instantaneous Short-circuit Protection
Set as a multiple of the primary overload adjustment Ie this device offers a broad adjustment range of 2 to 15 (2-30 on request).
This device is normally used to limit the time that higher Short-circuit currents can run in the protected circuit. Whilst the timed Short-circuit protection device waits for a set time, the instantaneous device immediately trips the breaker once the set value is reached.
The device used in the EntelliGuard™ Power Circuit Breaker maintains selectivity by only reacting to the 2nd half wave of a Short-circuit current and uniquely allows the use of the 'Zone Selective Interlock' feature (see section B).

(1) For more details see section E of the 2010 edition of the Record Plus catalogue.

Unelec Equipment
www.unelec-equipment.com
Tel: +1 319 244 84 69 UeeS Co. Tel: +1 650 466 86 39
Info@unelec-equipment.com

Applications

Protection of Generator sets, Motors, Capacitor banks and Transformers
Use of EntelliGuard™ Breakers in Automatic Power Transfer Systems (ATS)

Introduction
The Electronic Trip Unit used in the EntelliGuard™ Power circuit breaker offers many additional protection devices, a full description of which can be found in section B. Here a number of the possible applications of these devices is described briefly.

Protection of Generator sets
The overload and Short-circuit devices used to protect a generator need to react quicker and at lower current levels than those used to protect other devices.
After establishing the capabilities of the generator set under overload and Short-circuit conditions, the protection devices need to be adjusted accordingly.
On a Power Circuit breaker use of the 'faster' overload protection bands (LTDB set between Minimum and the C6 band) and a low setting of the timed Short-circuit protection (2.5 x Ir) is recommended. The optional 3 phase Undervoltage protection available in the GT-H trip unit can also be considered.

Protection of Motors
On starting electrical Motors draw more current than when running under normal conditions. These starting currents differ strongly per type and should not cause tripping of the device protecting the circuit.

The IEC 60947-4 has defined four different 'operational' or 'Trip' classes:

Trip class	Required tripping times at		
	1.2 x In	1.5 x In	7.2 x In
10A	t < 2 hours	t < 2 min.	2 ≤ t < 10 sec.
10	t < 2 hours	t < 4 min.	4 ≤ t ≤ 10 sec.
20	t < 2 hours	t < 8 min.	6 ≤ t ≤ 20 sec.
30	t < 2 hours	t < 12 min.	9 ≤ t ≤ 30 sec.

This table is in some cases extended to include a 'trip class 40' (assumed to be a 15-40 second band at 7.2 x In).
On a Power Circuit breaker, use of the 'slower' protection bands that closely match the indicated classes is recommended (LTDB set between the C8 to the C22 band).

Switching on a Motor also produces a high but very short inrush peak current which could activate the Short-circuit protection of a breaker and cause unexpected tripping. Here the timed Short-circuit device of a Power Circuit Breaker must be set to at least 12 x Ir with a time delay of 50 Milliseconds (STDB band 3). If an instantaneous protection device is present and switched on, a setting of at least 12 x Ie is recommended.

After an overload event the Motor and wiring are still warm, immediate re-energization of the electrical circuit could result in damage of the electrical circuit and the motor.
The overload protection device must incorporate a thermal memory device that prevents re-energization before a certain cooling time has elapsed.

Remark
For an overview of the used abbreviations (as LTDB and STDB) see page B.22.

Furthermore, the prevention of anomalies as the motor losing a phase or a motor with blocked rotor need to be prevented and require additional protection devices.
Next to the 'standard' protection devices the EntelliGuard™ Electronic Trip Unit has a thermal memory function, an optional 3phase Undervoltage relay and current unbalance device thus providing comprehensive motor protection.

Protection of Capacitor banks
Power Circuit breakers are designed to offer high making and breaking capacities under adverse conditions: The switching of capacitor banks has little to no effect on the breaker, its characteristics as a protective device or on its lifespan.
However the current flowing in the circuit can trip a circuit breaker and a capacitor load does display certain anomalies. Here the current flowing in the circuit cannot be assumed to be the calculated capacitor current only. The effective current value is higher due to harmonic content (normally assumed as 30%) and an allowance must be made for tolerances in the capacitance of the units (10%). The protection devices of the Power Circuit Breaker must be set accordingly.

Protection of LV/LV Transformers.
Transformers generally produce a very high inrush current. The crest values of the first half cycle may reach values of 15 to 25 time the normal rated current.
Manufactures data and tests have indicated that a protection device feeding a transformer must be capable of carrying the following current values without tripping.

Transformer value	imum crest inrush values		
	1st period	2nd period	After 3 periods
< 50 kvA	25 x In	12 x In	5 x In
≥ 50 kvA	15 x In	8 x In	3.5 x In

It is recommended that the timed Short-circuit device of a Power Circuit Breaker is set to at least 8 x Ir with a time delay of 30 Milliseconds (STDB band 1). If an instantaneous protection device is present, the use of the extended adjustment range with setting of 20 x Ie is advisable (=15 x In plus tolerances).

Automatic Transfer Systems
EntelliGuard™ Power Circuit breakers are available with mechanical interlocks for 2 to 3 breakers and have a unique electrical network interlocking system allowing the user to completely lock out one of more breakers.
The logical transfer of power from one source to another is thus strongly simplified whilst the high speed electrical closing and opening of the device allows their use in synchronization applications.
Here, numerous other EntelliGuard™ protection features can be used, one of which being the Electronic Trip units 3 phase Undervoltage release. This to establish if voltage on a certain power source is present and if a generator set has reached its nominal voltage.

Environmental considerations

Ambient temperature
EntelliGuard™ Power Circuit Breakers are designed to operate normally at temperatures of -5 degrees to +70°C. They can be used at temperatures down to -20°C with a reduced electrical and mechanical life span.
To prevent materials from reaching temperatures that have an adverse effect on their electrical and/or mechanical properties, de-rating factors must be applied when the device is used in ambient temperatures higher than 50°C.

Storage temperature
Power Circuit Breakers can be stored at non operational temperatures of -40 degrees up to +70°C.

Influence of Altitude
Up to an altitude of 2000m above sea level no de-rating of breaker current or rated voltage is applicable. For altitudes above 2000m the following de-rating factors apply:

	Altitude Correction factors		
Alttitude	**≤ 2000M**	**2500M**	**4000M**
Voltage (Ue)	1	0.95	0.8
Current (In)	1	0.99	0.96

Other atmospheric conditions
The EntelliGuard™ breaker line has been designed to operate at the temperatures and relative humidities defined in the EN 60947 clause 6.1.3.1.
They also meet the requirements of the following standards:

IEC 68-2-1	Cold
IEC 68-2-2	Dry Heat
IEC 68-2-3	Damp Heat
IEC 68-2-11	Salt
IEC 68-2-14	Change of Temperature
IEC 68-2-30	Damp Heat cyclic
IEC 721	Climatic

Shock and Vibration
Power Circuit Breakers meet the shock and vibration requirements of the Lloyd's Register of Shipping, the Germanischer Lloyd and the American Board of shipping.
They also meet the requirements of the following standards:

IEC 68-2-6	Vibration
IEC 68-2-27	Shock test
IEC 68-2-29	Bump
IEC 68-2-31	Drop test

Other
All EntelliGuard™ devices meet the existing European ROHS directive and carry the CE mark.

Electromagnetic compatibility
The EntelliGuard™ Power Circuit Breaker and its electronic trip unit meet the most stringent requirements off the EN60947-2 and IEC 1004 standard. The following tests have been successfully completed.

Harmonics, current dips, interruptions and power frequency variations
All EN 60947 Annex F, Sub-clause F4.1 through 3 requirements covering non sinusoidal currents resulting from harmonics are met. Testing covering the following elements:

- Wave forms consisting of a fundamental + 3rd harmonic component at 50 and 60Hz
- Wave forms consisting of a fundamental + 5th harmonic component at 50 and 60Hz
- Composite wave forms with a fundamental component + a 3rd, 5th and 7th harmonic at 50 and 60Hz
- Current dips and current interruptions
- Frequency variations from 45 to 65Hz in 1 Hz steps

Electrostatic discharge
En 60947 Annex F, Sub-clause F and the IEC 1004-2
- Passed level 4, air discharge 15kV

Radiated, radio frequency, electromagnetic field immunity test
EN 60947-2 Annex F, Sub-clause F7 and the IEC 1000-4-3 (basic standard)
- Passed higher than level 4 .... Field strength 30V/m

Electrical fast transient/burst
EN 60947-2 Annex F, Sub-clause F5 and the IEC 1000-4-4 (basic standard)
- Passed level 4 burst peak voltage 4kV

Surge immunity test
EN 60947-2 Annex F, Sub-clause F5 and the IEC 1000-4-5 (basic standard)
- Passed level 4 Voltage 1.2µs/50µs 6kV; current 8µs/20µs 3kA

Dry heat test
EN 60947-2 Annex F, Sub-clause F8
- Passed all test requirements

Thermal shock test
EN 60947-2 Annex F, Sub-clause F9
- No nuisance tripping within the 28-day temperature cycles

Unelec Equipment
www.unelec-equipment.com
Tel: +1 319 244 84 69 UeeS Co. Tel: +1 650 466 86 39
Info@unelec-equipment.com

Wiring Diagrams

E.2 Breaker connection schemes Terminal A (all Envelopes)

E.4 Breaker connection schemes Terminal A all Envelopes) and Terminal B (Envelope 1.2 & 3 only)

E.5 Breaker connection schemes Terminal B (Envelopes 1.2 & 3 only)

E.6 Cassette & Trip Unit connection schemes (all Envelopes)

E.7 Trip Unit connection schemes (all Envelopes)

Unelec Equipment
www.unelec-equipment.com
Tel: +1 319 244 84 69 UeeS Co. Tel: +1 650 466 86 39
Info@unelec-equipment.com

Breaker Connection schemes

Standard use of Terminal Block A on Envelope T

One Terminal block A is supplied with each breaker

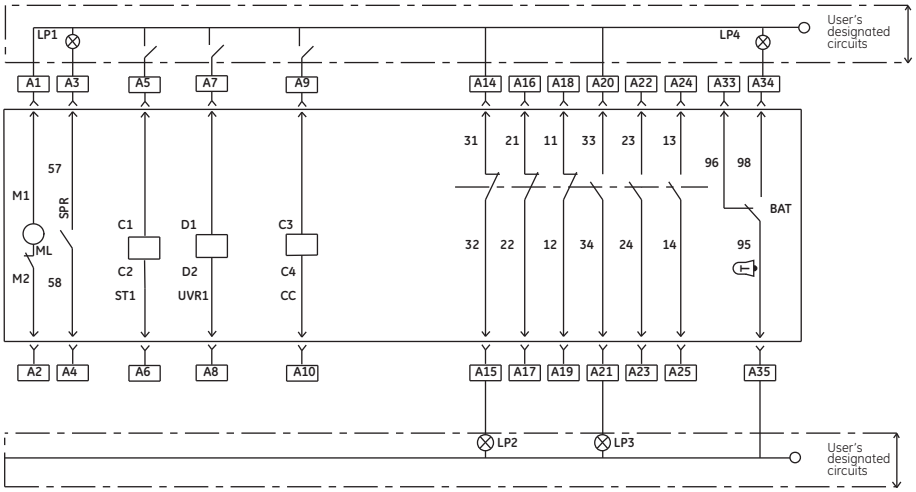

Standard use of Terminal Block A on Envelopes 1, 2 & 3

One Terminal block A is supplied with each breaker

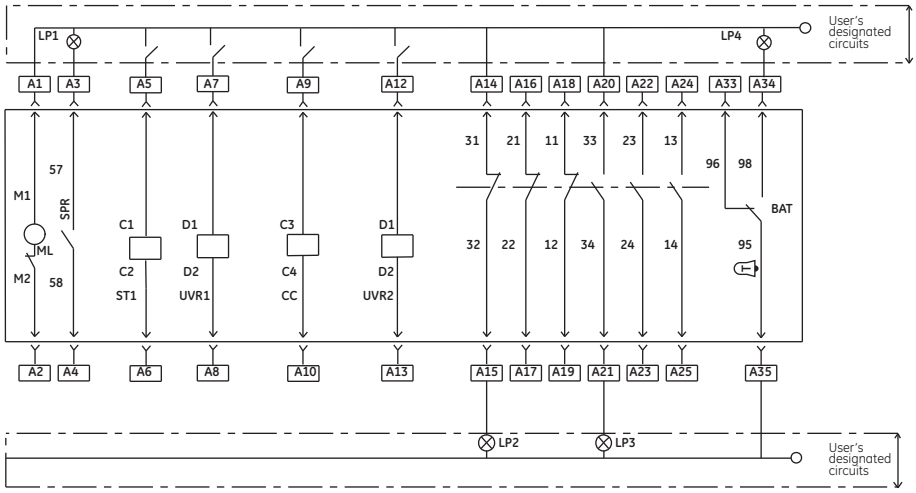

Unelec Equipment
www.unelec-equipment.com
Tel: +1 319 244 84 69 UeeS Co. Tel: +1 650 466 86 39
Info@unelec-equipment.com

Breaker Connection schemes

Extended use of Terminal Block A on Envelope T

Used with 4NO & 4NC Auxiliary Contacts

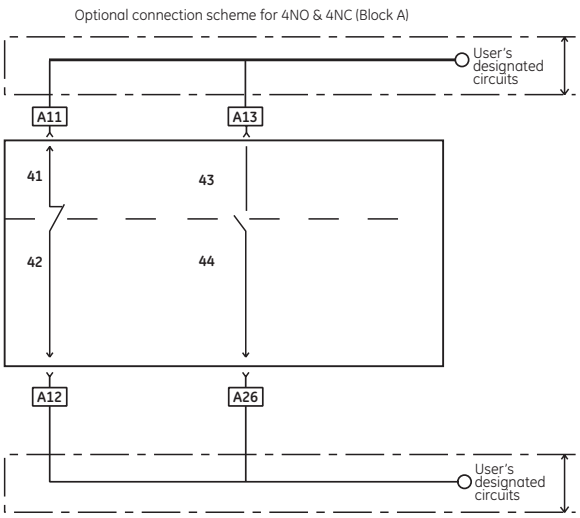

User designated circuits; indicators
LP1: Spring charge status
LP2: Breaker open
LP3: Breaker closed
LP4: Fault
LP5: Breaker ready to close

Terminology
CC: Close coil
ST: Shunt release
UVR: Undervoltage release
SPR: Spring change status
RTC: Ready to close status
M: Motor operator
BAT: Bell alarm trip
CCC: Comand close coil
NI: Network interlock

Optional use of Terminal Block A on ALL Envelopes

Used with a Command Closing Coil (CCC)

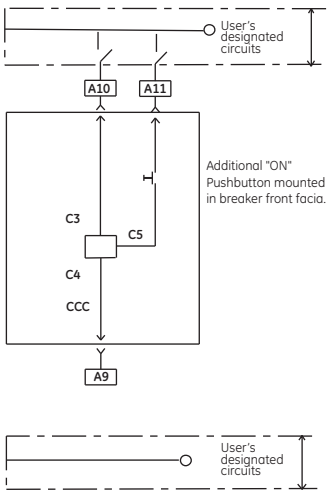

Used with a 2nd Shunt Release (Replacing 2nd UVR release)

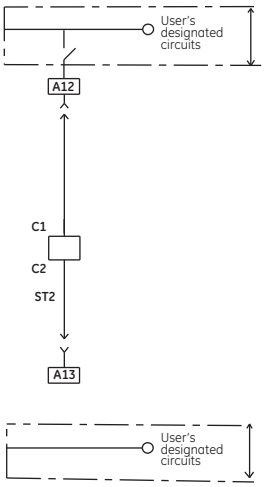

Used with a RTC contact (Replacing SPR contact)

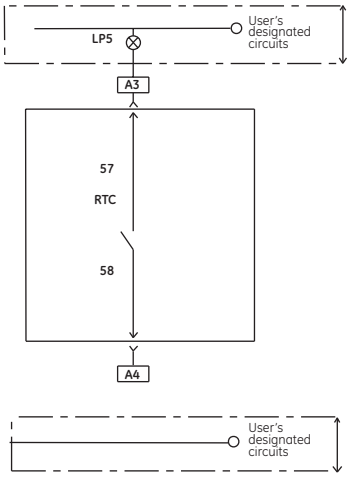

(1) Only possible on Envelope T with a set of 3NO plus 3NC auxiliary contacts
(2) Only possible on Envelope 1, 2 & 3 (Not on Envelope T)

Unelec Equipment
www.unelec-equipment.com
Tel: +1 319 244 84 69 UeeS Co. Tel: +1 650 466 86 39
Info@unelec-equipment.com

Breaker Connection schemes

Optional use of Terminal Block A on Envelopes 1, 2 & 3

Used with a Remote Reset Coil
(Replacing Shunt Release coil)

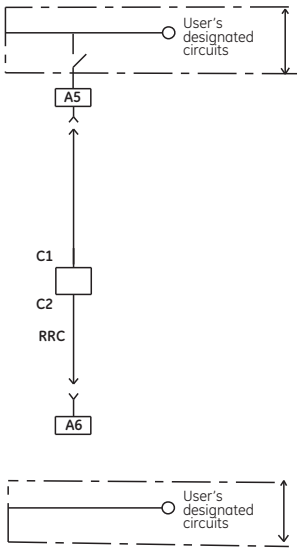

Used with a Network Interlock (NI) (Replacing 1 UVR and 1 ST)

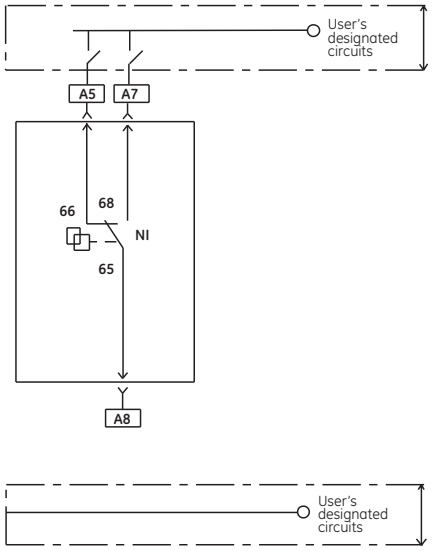

Standard use of Terminal Block B on Envelopes 1, 2 & 3

Terminal block B is supplied with factory mounted breakers, when needed.

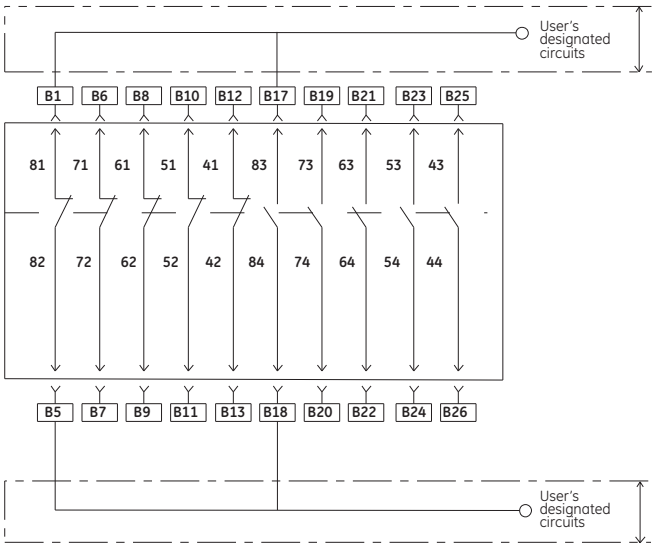

Optional use of Terminal Block B on Envelopes 1, 2 & 3

Used with a Network Interlock (NI)
(Replacing 2 NO Aux. Contacts)

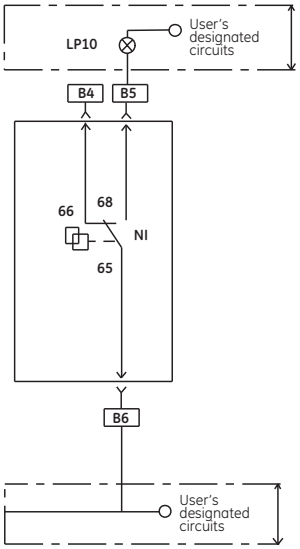

Unelec Equipment
www.unelec-equipment.com
Tel: +1 319 244 84 69 UeeS Co. Tel: +1 650 466 86 39
Info@unelec-equipment.com

Optional use of Terminal block B

Breaker Connection schemes

Optional use of Terminal Block B on Envelopes 1, 2 & 3

Used with Coil indication contacts (Replacing 2 NC and 1 NO Aux. contact)

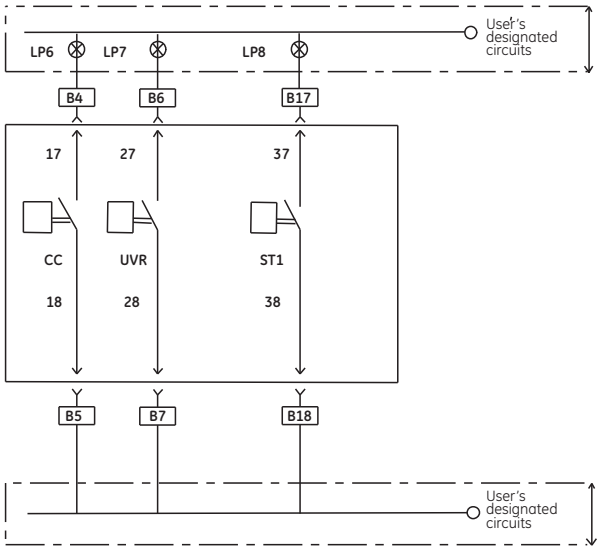

Used with Coil Indication contact (Replacing 1NO Aux. contact)

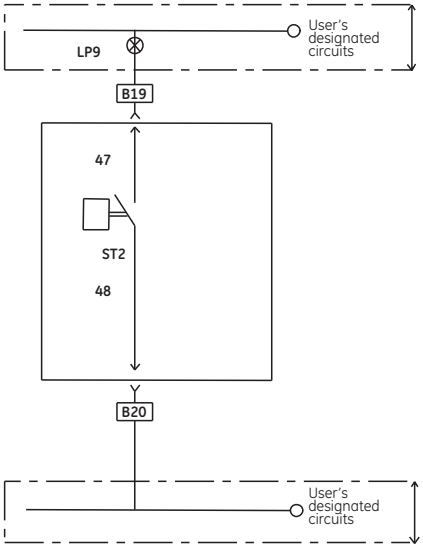

Optional use of Terminal block B on Envelopes 1, 2 & 3

Used with Coil Indication contact (Replacing 1 NO Aux. Contact)

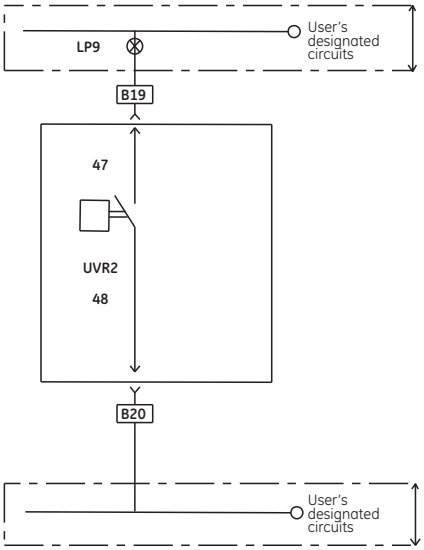

User designated circuits; indicators
LP6: CC powered
LP7: UVR not powered
LP8: ST powered
LP9: ST2 powered/UVR2 not powered
LP10: Network interlock lockout

Terminology
CC: Close coil
ST: Shunt release
UVR: Undervoltage release
SPR: Spring change status
NI: Network interlock

Unelec Equipment
www.unelec-equipment.com
Tel: +1 319 244 84 69 UeeS Co. Tel: +1 650 466 86 39
Info@unelec-equipment.com

Cassette & Trip Unit connection schemes

Optional Cassette Indication Switches valid for ALL Envelopes

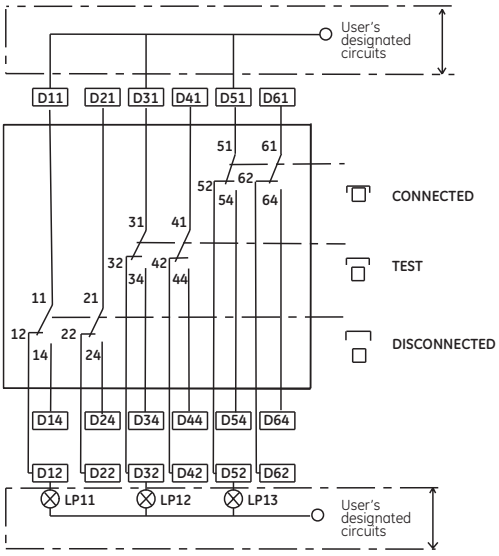

User designated circuits; indicators

LP11: Breaker in disconnected position
LP12: Breaker in test position
LP13: Breaker in connected position

Trip Unit type GT-E, valid for ALL Envelopes

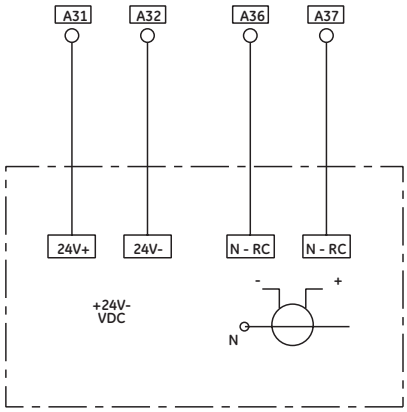

Unelec Equipment
www.unelec-equipment.com
Tel: +1 319 244 84 69 UeeS Co. Tel: +1 650 466 86 39
Info@unelec-equipment.com

Trip Unit connection schemes

Trip Unit type GT-S, valid for ALL Envelopes

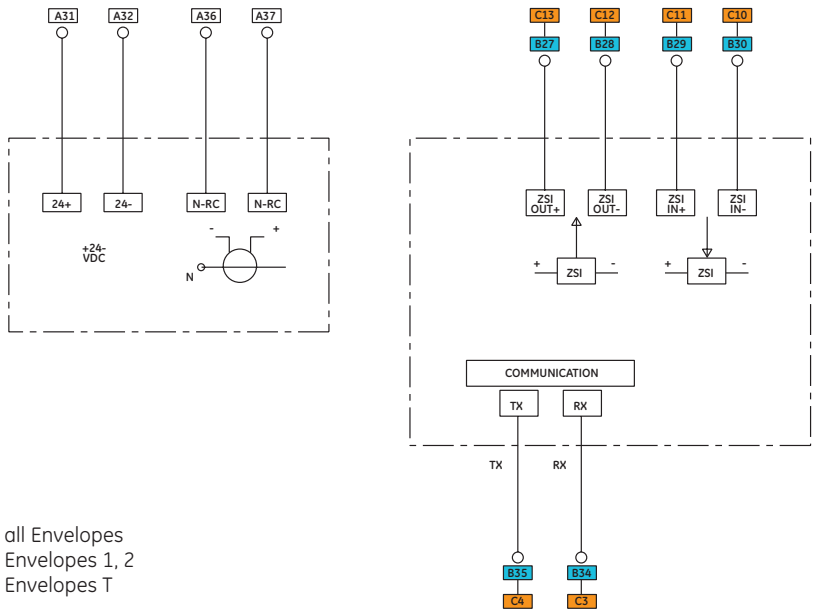

A Valid for all Envelopes
B Valid for Envelopes 1, 2
C Valid for Envelopes T

Trip Unit type GT-N, valid for ALL Envelopes

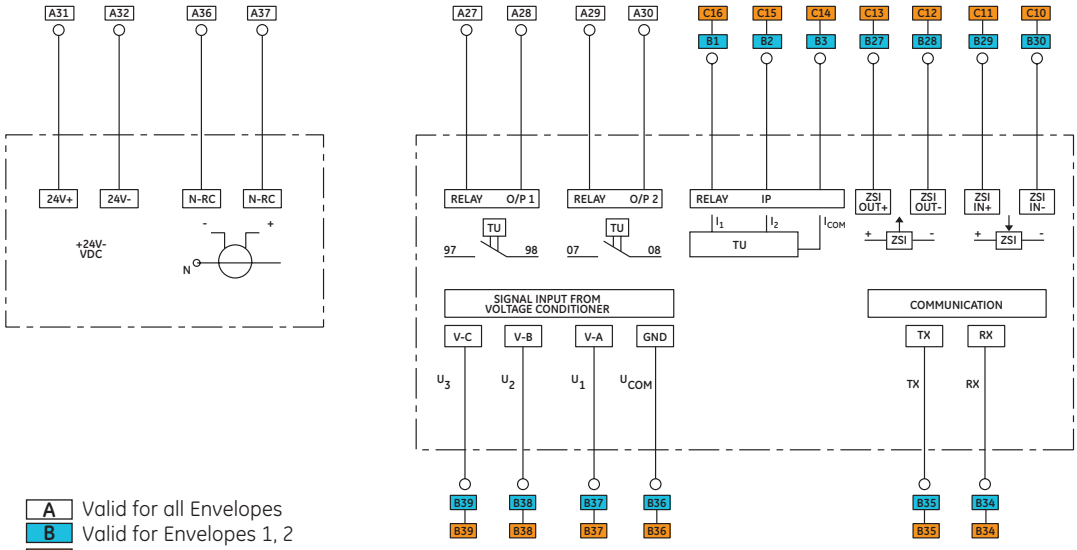

A Valid for all Envelopes
B Valid for Envelopes 1, 2
C Valid for Envelopes T

Unelec Equipment
www.unelec-equipment.com
Tel: +1 319 244 84 69 UeeS Co. Tel: +1 650 466 86 39
Info@unelec-equipment.com

Trip Unit connection schemes

Trip Unit type GT-H, valid for ALL Envelopes

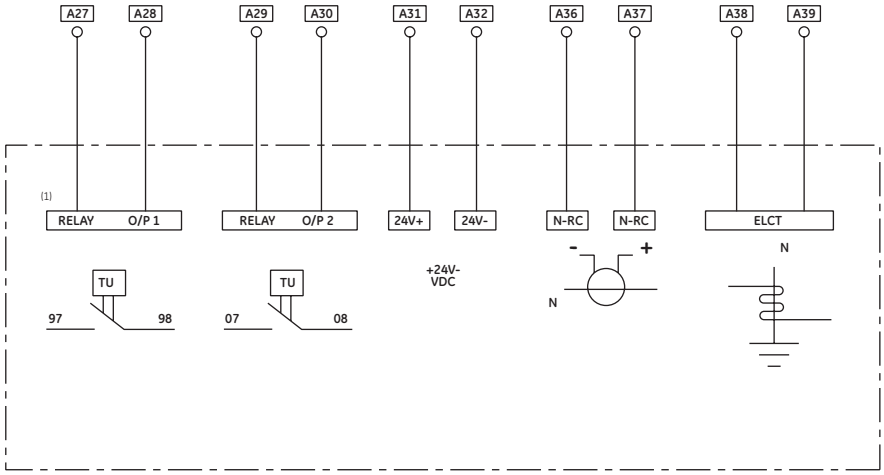

A Valid for all Envelopes
B Valid for Envelopes 1, 2
C Valid for Envelopes T

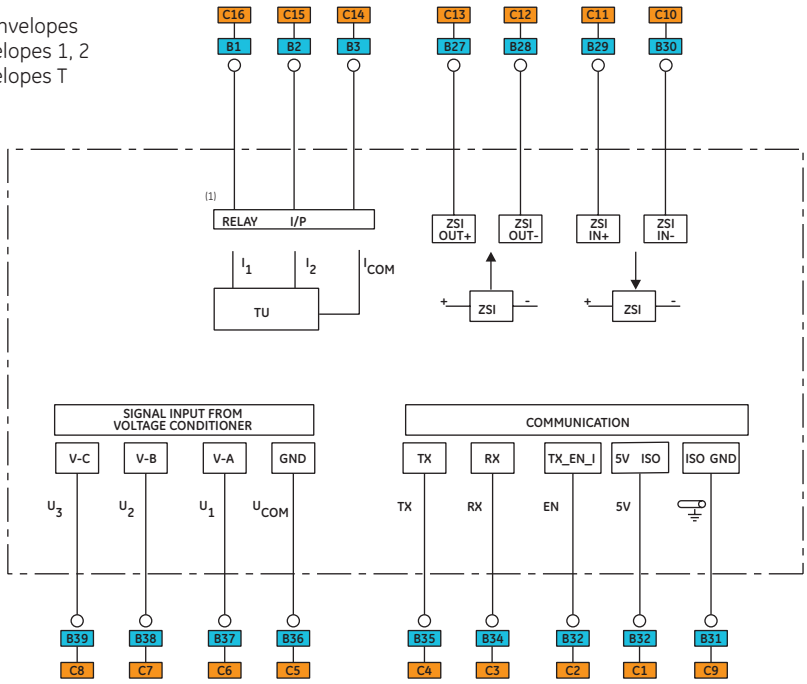

Terminology

24V+/24V-:	Auxiliary power supply to trip unit	ELCT:	Earth leg CT
N-RC:	Neutral Rogowski coil	RELAY O/P:	Relay OUT PUT
RXD:	Modbus/Profibus communication	RELAY I/P:	Relay IN PUT
TXD:	Modbus/Profibus communication	V-A/V - B/V-C:	Signal input from voltage conditioner
TX_EN_I:	Profibus communication	GND:	Ground for voltage
5V ISO:	Profibus communication	ZSI OUT:	Zone selective interlock OUT
ISO GND:	Profibus communication	ZSI IN:	Zone selective interlock IN

(1) Relay output one and electronic input one are assigned to RELT function.

Unelec Equipment
www.unelec-equipment.com
Tel: +1 319 244 84 69 UeeS Co. Tel: +1 650 466 86 39
Info@unelec-equipment.com

Dimensions

F.2 Envelope T - Fixed type

F.3 Envelope T - Draw-out type

F.5 Envelope T - Optional Connection modes

F.6 Envelope 1 - Fixed type

F.7 Envelope 1 - Draw-out type

F.8 Envelope 2 - Fixed type

F.9 Envelope 2 - Draw-out type

F.10 Envelope 2 - "Limited De-rating" Draw-out type

F.11 Envelope 1 & 2 - Optional Connection modes

F.12 Envelope 3 - Fixed type

F.14 Envelope 3 - Draw-out type

F.16 IP54 Flange, Time Delay Module UVR, 24V Power Supply

F.17 Rogowski's, Current Transformers,
Door interlock system & wall mounting brackets

F.18 Interlocking with cable systems, 2 way

F.19 Interlocking with cable systems, 3 way

Unelec Equipment

www.unelec-equipment.com

Tel: +1 319 244 84 69 UeeS Co. Tel: +1 650 466 86 39

Info@unelec-equipment.com

Envelope T – Fixed pattern

Front view 4pole

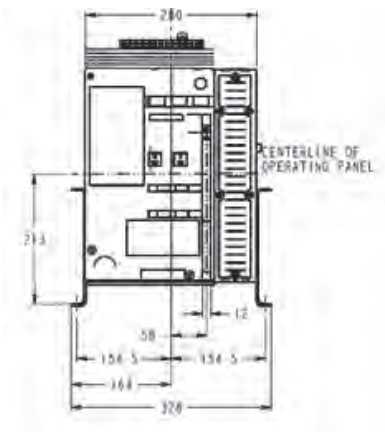

Front view 3pole

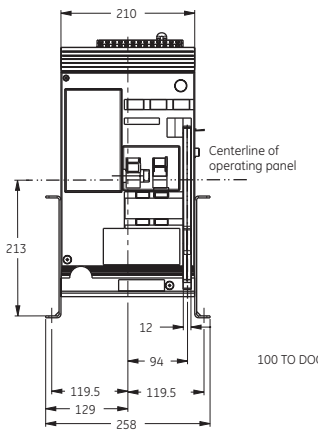

Side view

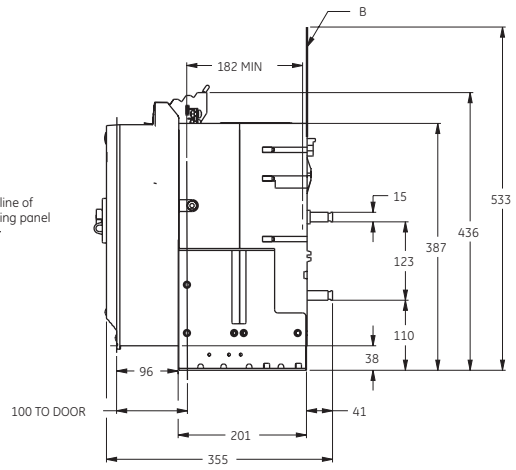

Top view 4pole

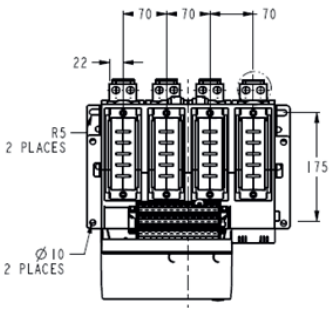

Top view 3pole

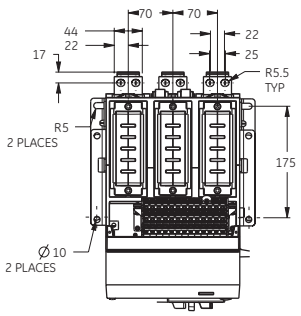

Door cut-out

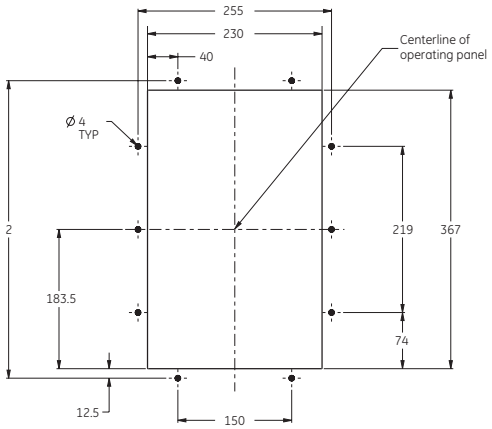

Cutout Details for Fixed Breaker

Standard Connection Pads

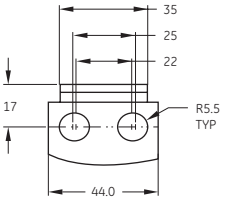

Remarks

B – Minimum space to earth metal and for Arc Chute removal.
Insulated metal or insulate sheet customer supplied.

Unelec Equipment
www.unelec-equipment.com
Tel: +1 319 244 84 69 UeeS Co. Tel: +1 650 466 86 39
Info@unelec-equipment.com

Envelope T – Draw-out pattern (Universal)

Front view 4pole

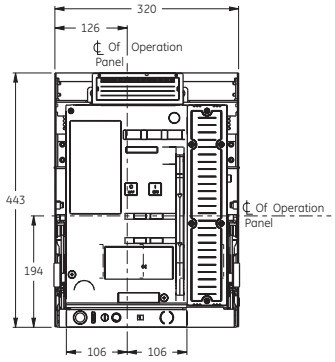

Front view 3pole

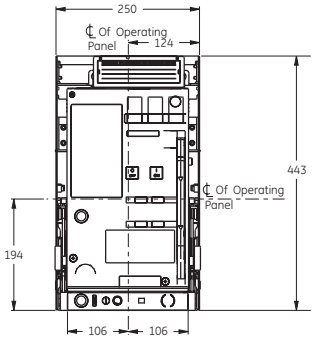

Side view

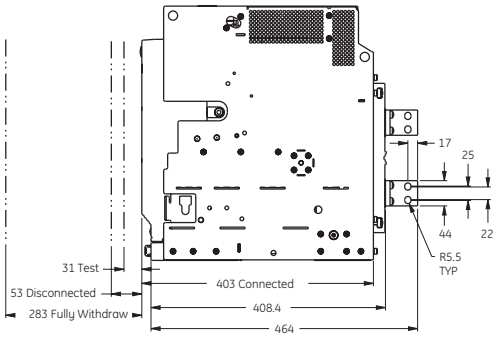

Bottom view 4pole

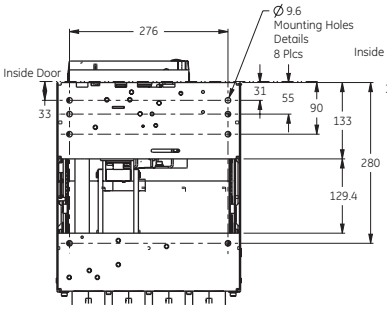

Bottom view 3pole

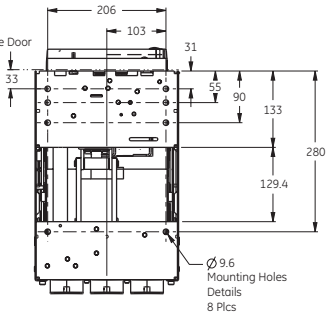

Door cut-out

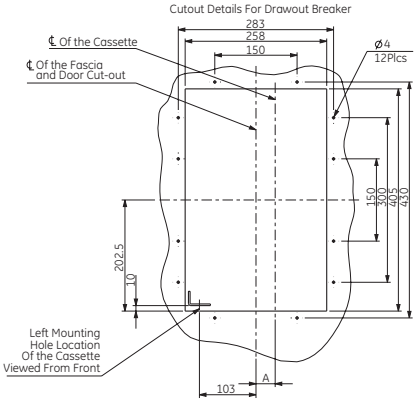

Breaker type	DIM "A"
Envelope T 3 pole	0.0
Envelope T 4 pole	35.0

Universal Connection Pads Mounted Horizontally or Vertically

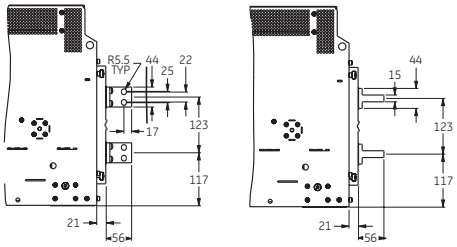

Universal Connection Pads Details

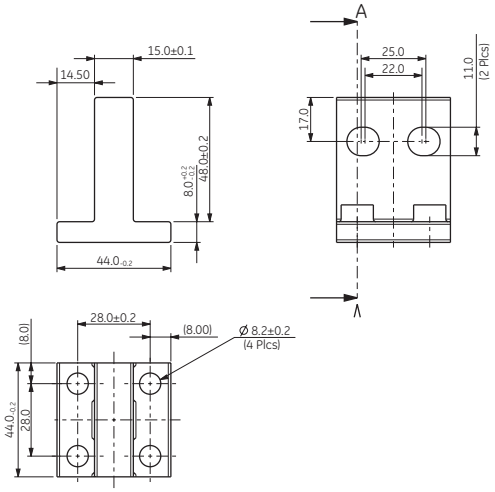

Remarks

A – 6 mounting holes of 9.5mm

Unelec Equipment
www.unelec-equipment.com
Tel: +1 319 244 84 69 UeeS Co. Tel: +1 650 466 86 39
Info@unelec-equipment.com

Envelope T – Draw-out pattern (Direct Horizontal)

Front view 4pole

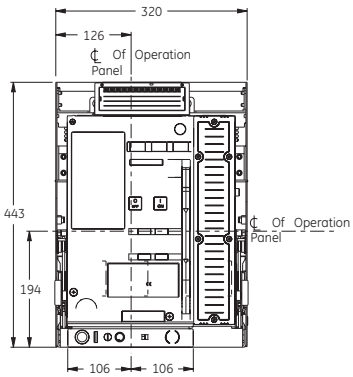

Front view 3pole

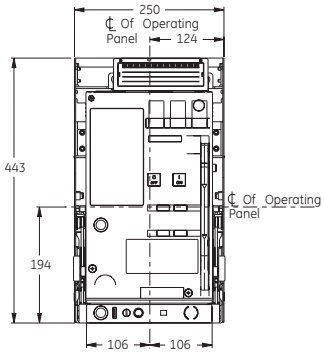

Side view

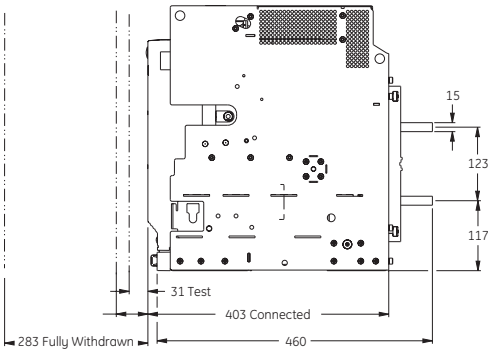

Bottom view 4pole

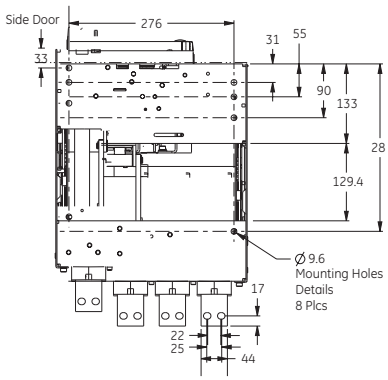

Bottom view 3pole

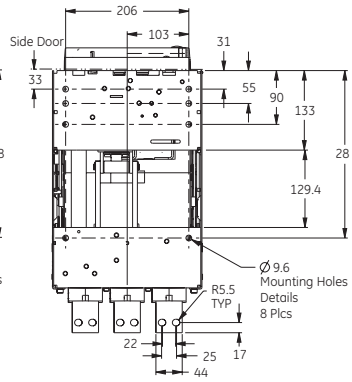

Door cut-out

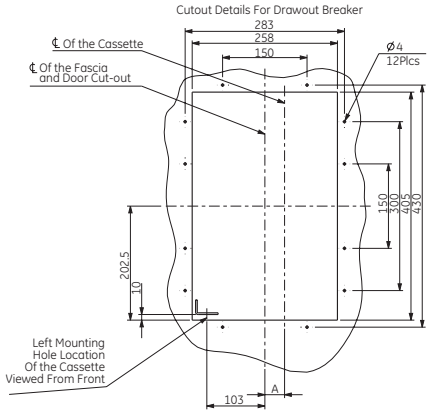

Back View 4pole

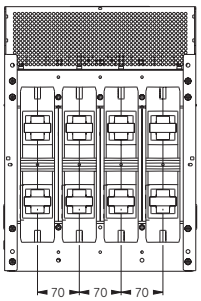

Back View 3pole

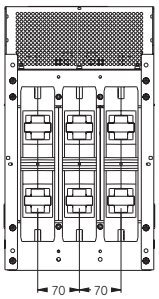

Breaker type	DIM "A"
Envelope T 3 pole	0.0
Envelope T 4 pole	35.0

Remarks

A – 6 mounting holes of 9.5mm

Unelec Equipment
www.unelec-equipment.com
Tel: +1 319 244 84 69 UeeS Co. Tel: +1 650 466 86 39
Info@unelec-equipment.com

Envelope T – Alternate Connection modes

Fixed Vertical Rear Connection

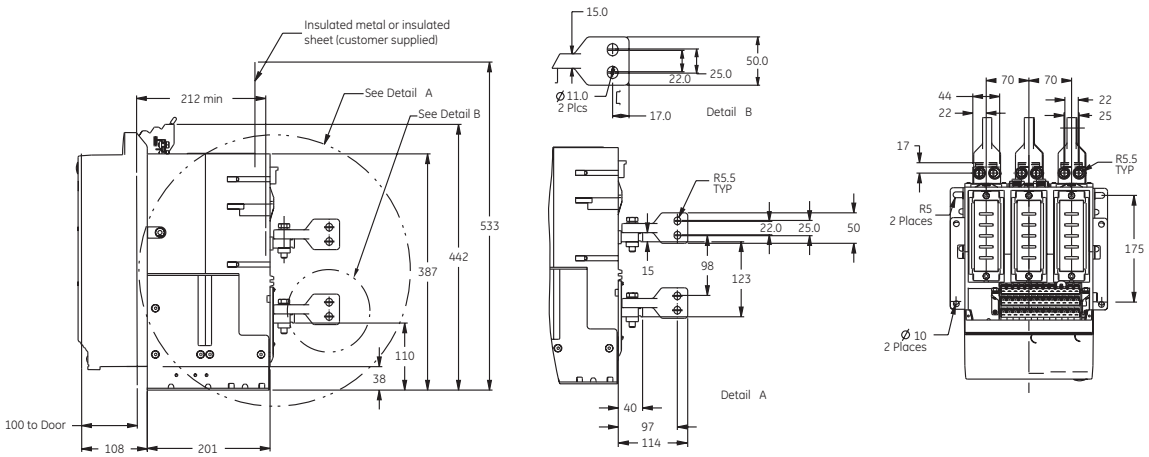

Fixed Front Connection

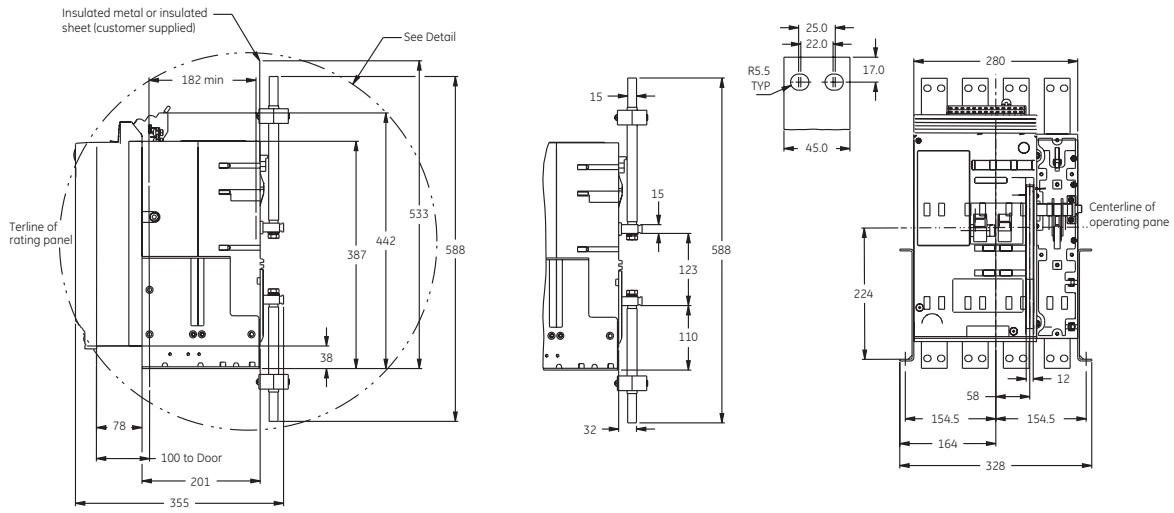

Draw-out Front Connection 4pole

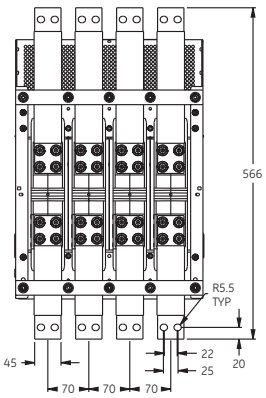

Draw-out Front Connection 3pole

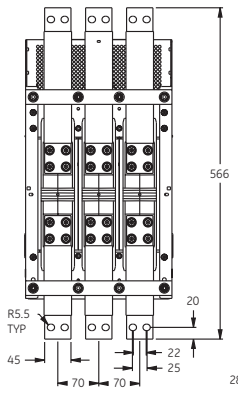

Draw-out Front Connection Side view

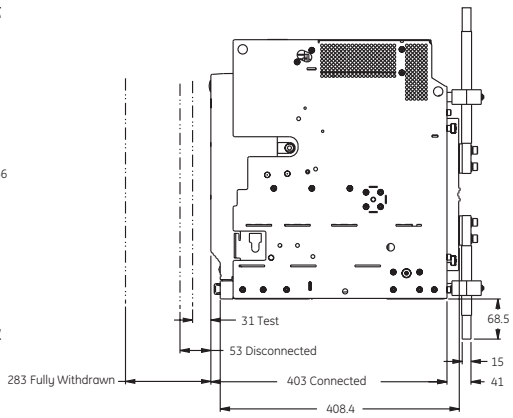

Unelec Equipment
www.unelec-equipment.com
Tel: +1 319 244 84 69 UeeS Co. Tel: +1 650 466 86 39
Info@unelec-equipment.com

Envelope 1 - Fixed pattern

Front view 4pole

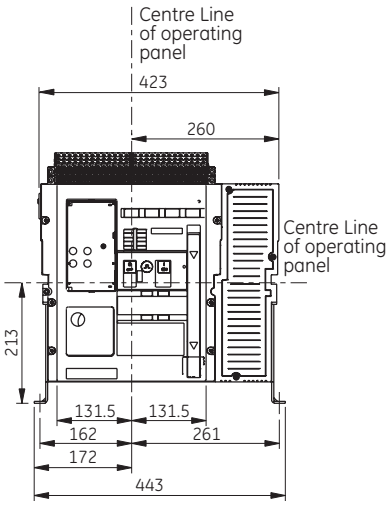

Front view 3pole

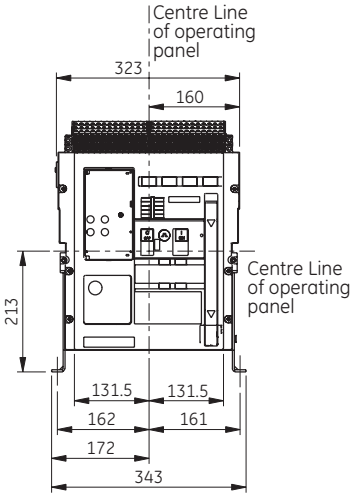

Side view

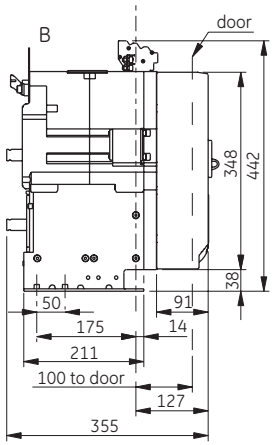

Top view 4pole

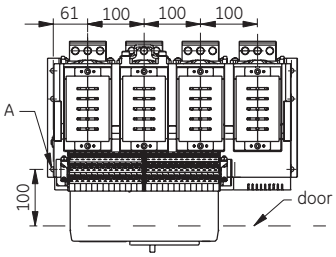

Door cut-out

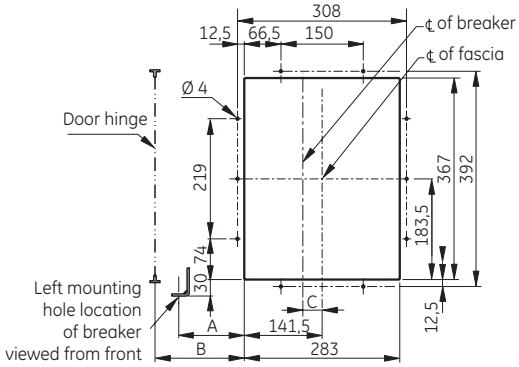

Top view 3pole

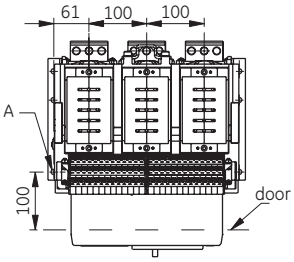

Breaker type	DIM "A"	DIM "B" minimum	DIM "C"
Envelope 1 3 pole	20.0	55.0	0.0
Envelope 1 4 pole	20.0	55.0	-49.5

Standard Connection pads[1]

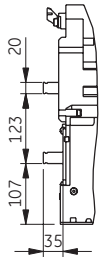

400 - 1600A
Type S

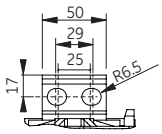

400 - 2000A
Types S, N & H

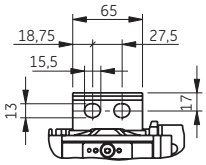

Remarks

A - 6 mounting holes of Ø 9.5mm

B - Please refer to section D for clearance distances

Unelec Equipment
www.unelec-equipment.com
Tel: +1 319 244 84 69 UeeS Co. Tel: +1 650 466 86 39
Info@unelec-equipment.com

Envelope 1 - Draw-out pattern

Front view 4pole

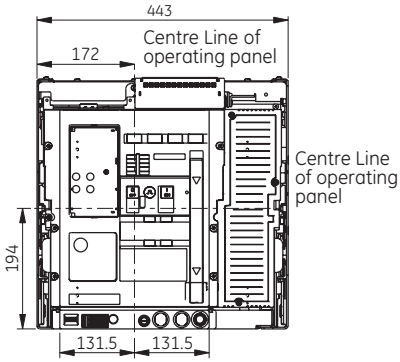

Front view 3pole

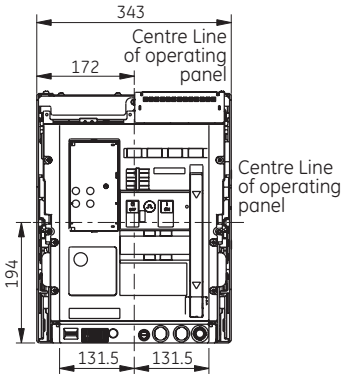

Side view

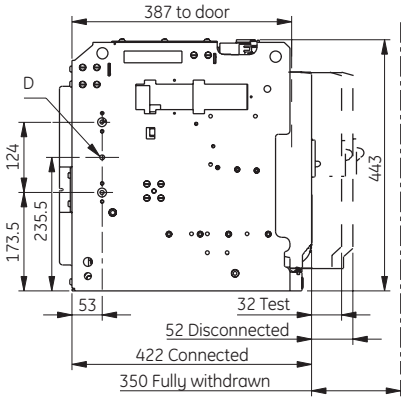

Top view 4pole

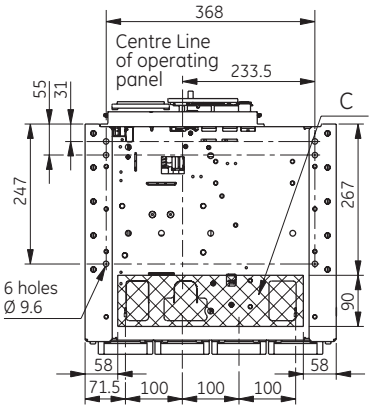

Door cut-out

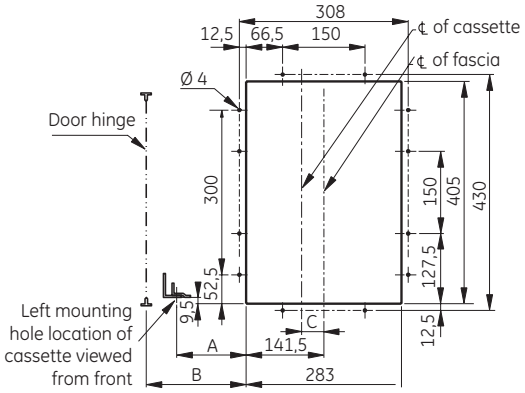

Top view 3pole

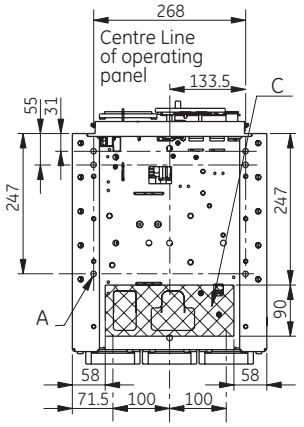

Breaker type	DIM "A"	DIM "B" minimum	DIM "C"
Envelope 1 3 pole	-7.0	60.0	0.0
Envelope 1 4 pole	-7.0	60.0	-49.5

Remarks

A - 6 mounting holes of Ø 9.5mm
C - Please leave unobstructed; Required for ventilation
D - 1 hole M6 Left & Right for earthing

Universal Connection pads Mounted Horizontally or Vertically

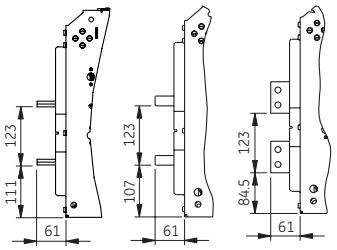

S type N & H type S, N & H type

Universal Connection pads Details

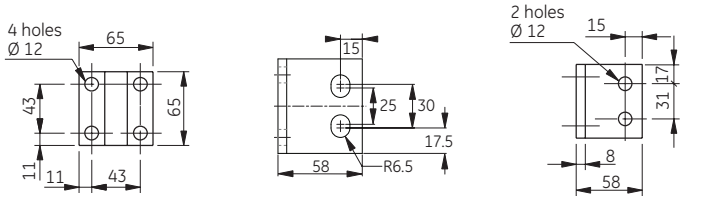

S, N & H type S type - 12mm thick N & H type - 20mm thick

Envelope 2 - Fixed pattern

Front view 4pole

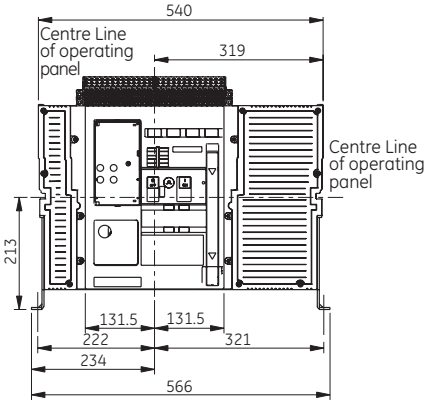

Front view 3pole

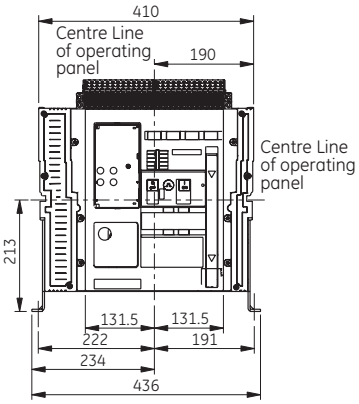

Side view

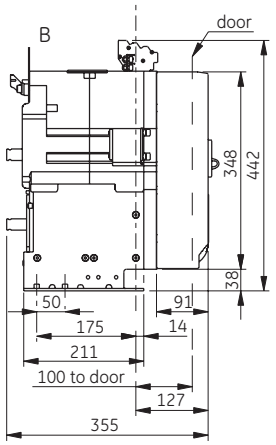

Top view 4pole

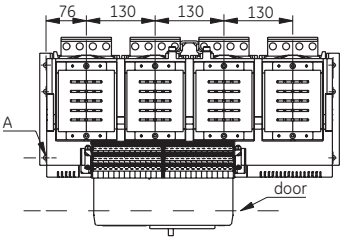

Door cut-out

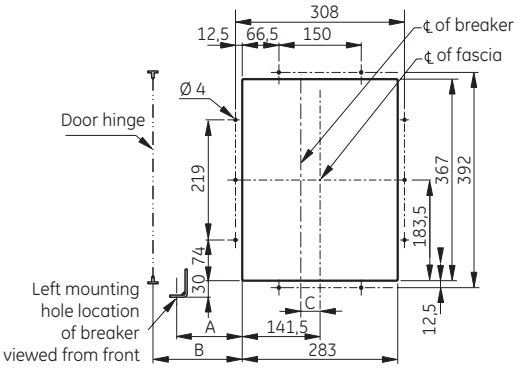

Top view 3pole

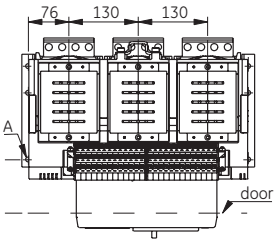

Breaker type	DIM "A"	DIM "B" minimum	DIM "C"
Envelope 2 3 pole	80.0	115.0	15.5
Envelope 2 4 pole	80.0	115.0	-49.5

Standard Connection pads

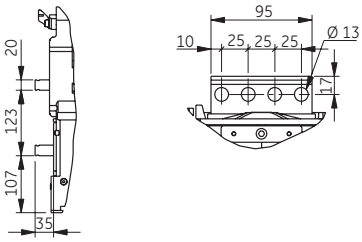

Remarks

A - 6 mounting holes of Ø 9.5mm
B - Please refer to section D for clearance distances

Envelope 2 - Draw-out pattern

Front view 4pole

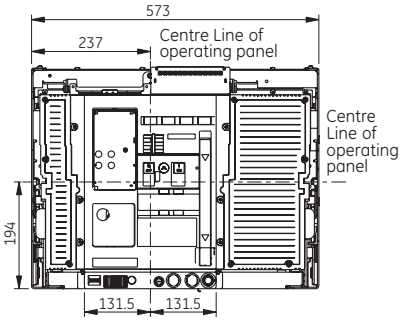

Front view 3pole

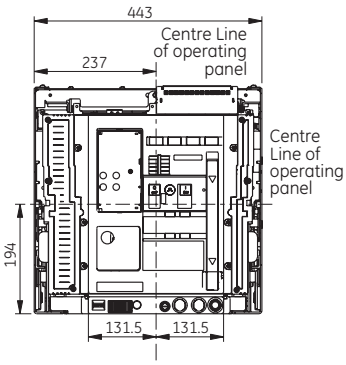

Side view

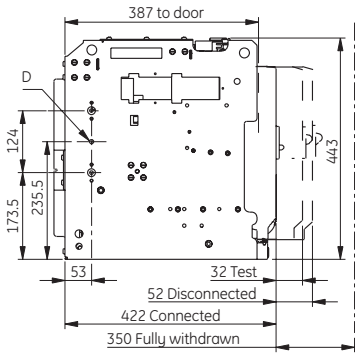

Top view 4pole

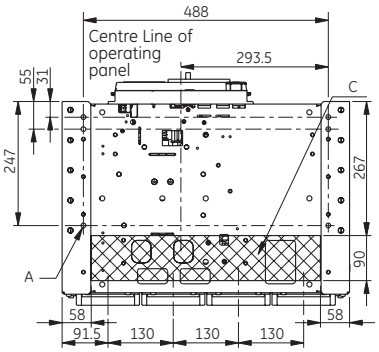

Door cut-out

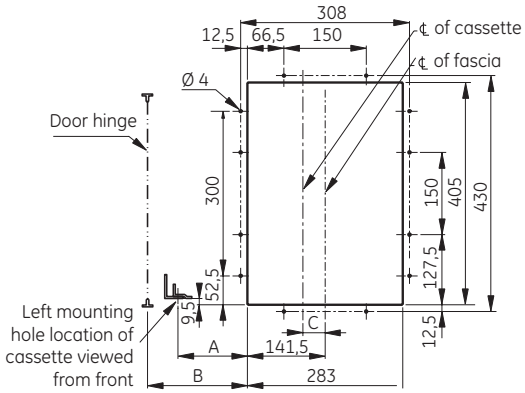

Top view 3pole

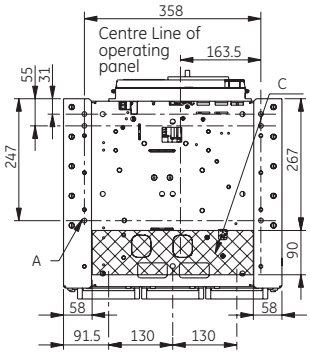

Breaker type	DIM "A"	DIM "B" minimum	DIM "C"
Envelope 2 3 pole	53.0	125.0	15.5
Envelope 2 4 pole	53.0	125.0	-49.5

Universal Connection pads Vertical or Horizontal max. 3200A

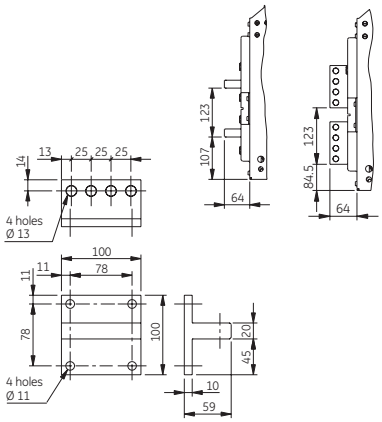

Universal Connection pads Only Vertical max. 4000A

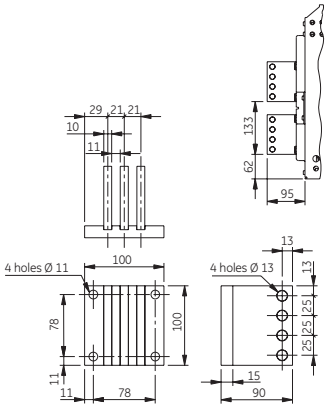

Remarks

A - 6 mounting holes of Ø 9.5mm
C - Please leave unobstructed; Required for ventilation
D - 1 hole M6 Left & Right for earthing

Unelec Equipment
www.unelec-equipment.com
Tel: +1 319 244 84 69 UeeS Co. Tel: +1 650 466 86 39
Info@unelec-equipment.com

Envelope 2 - "Limited De-rating" Draw-out type

Front view 4pole

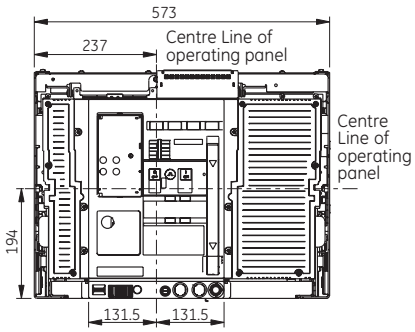

Front view 3pole

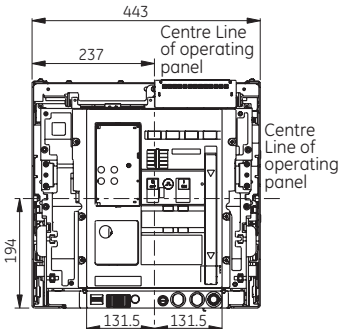

Side view

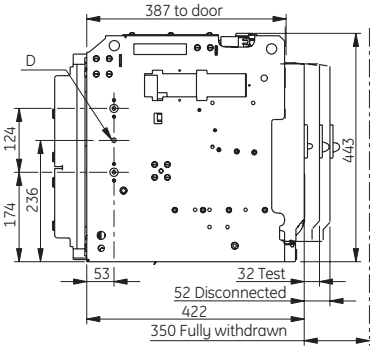

Top view 4pole

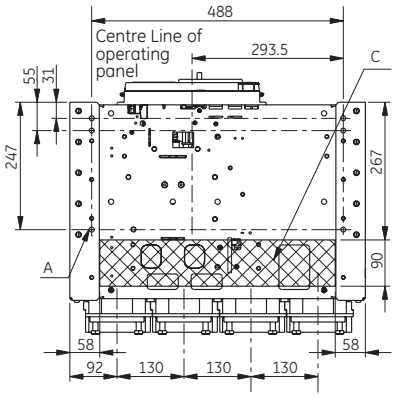

Door cut-out

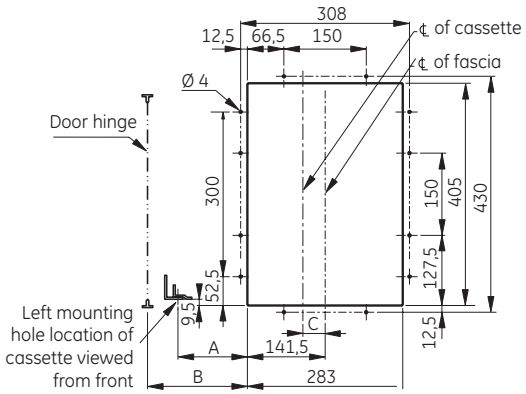

Top view 3pole

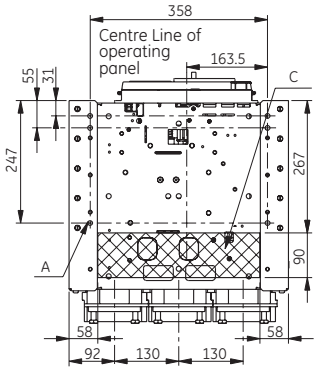

Breaker type	DIM "A"	DIM "B" minimum	DIM "C"
Envelope 2 3 pole	53.0	125.0	15.5
Envelope 2 4 pole	53.0	125.0	-49.5

Universal Connection pads
Vertical max. 4000A

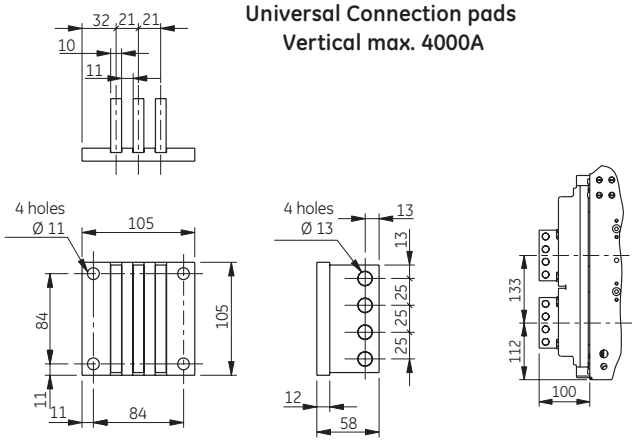

Remarks

A - 6 mounting holes of Ø 9.5mm
C - Please leave unobstructed; Required for ventilation
D - 1 hole M6 Left & Right for earthing

Unelec Equipment
www.unelec-equipment.com
Tel: +1 319 244 84 69 UeeS Co. Tel: +1 650 466 86 39
Info@unelec-equipment.com

Envelope 1 & 2 - Alternate Connection modes

Fixed Vertical Rear Connection Envelope 1

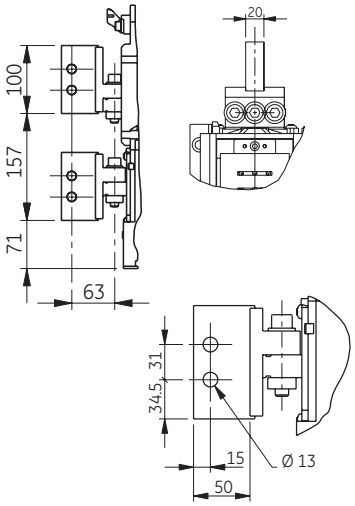

Fixed Vertical Rear Connection Envelope 2

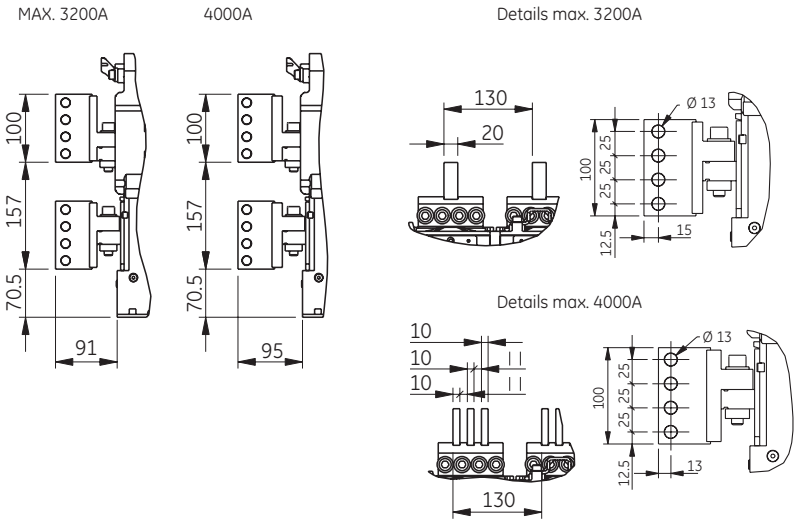

Fixed Front Connection Envelope 1 ≤1600A

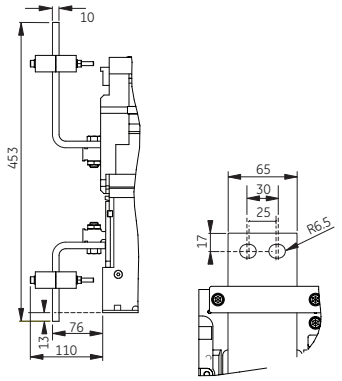

Fixed Front Connection Envelope 1 2000A

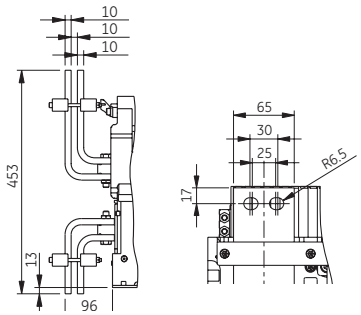

Draw-out Front Connection Envelope 1 ≤1600A

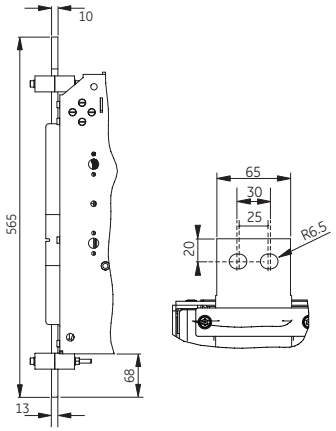

Draw-out Front Connection Envelope 1 2000A

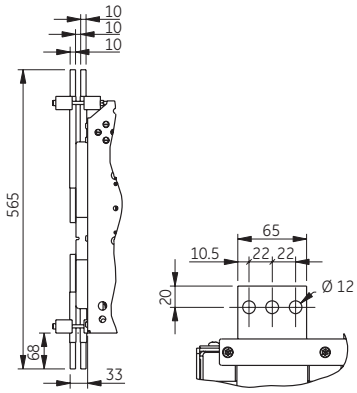

Fixed Front Connection Envelope 2

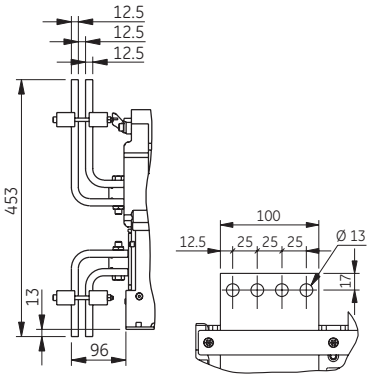

Draw-out Front Connection Envelope 2

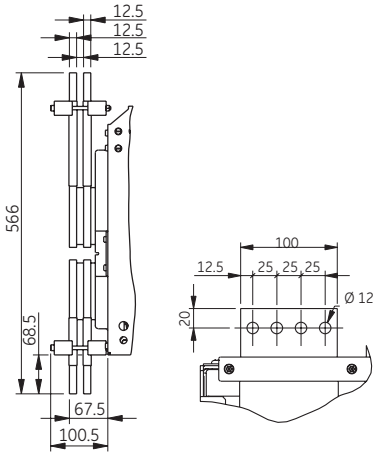

Unelec Equipment
www.unelec-equipment.com
Tel: +1 319 244 84 69 UeeS Co. Tel: +1 650 466 86 39
Info@unelec-equipment.com

Envelope 3 - Fixed type

Front view 4pole

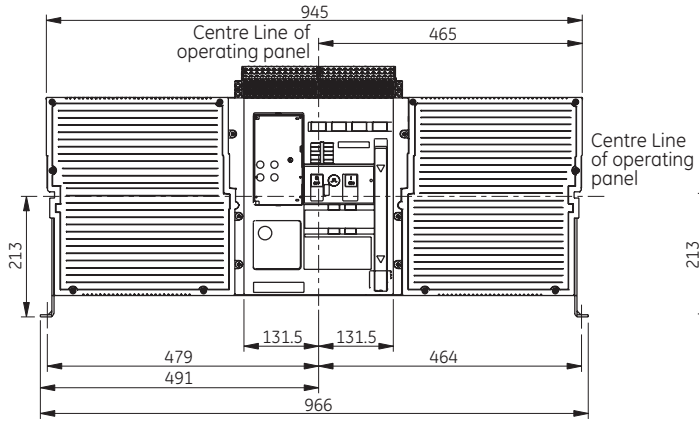

Front view 3pole

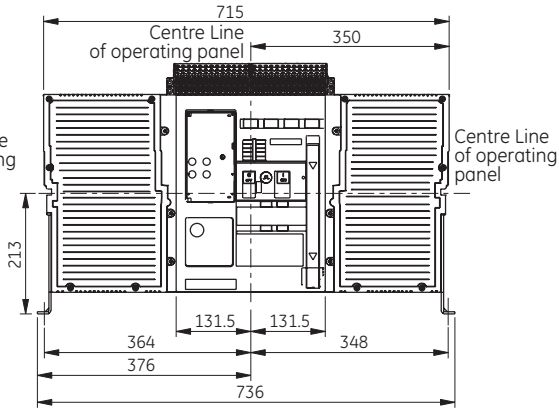

Top view 4pole

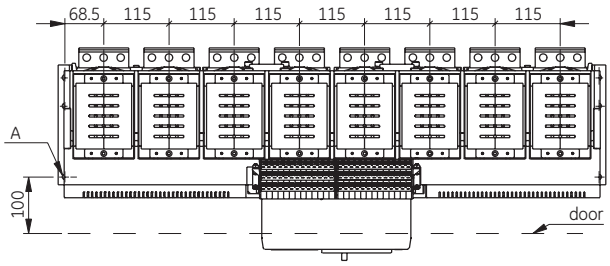

Top view 3pole

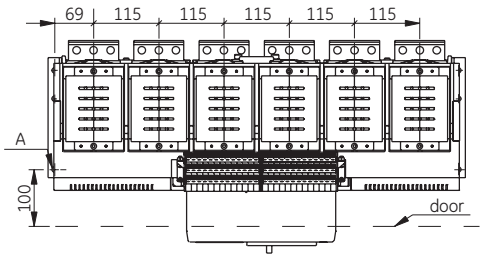

Unelec Equipment
www.unelec-equipment.com
Tel: +1 319 244 84 69 UeeS Co. Tel: +1 650 466 86 39
Info@unelec-equipment.com

Envelope 3 - Fixed type

Side view

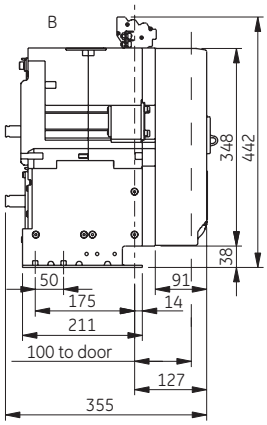

Door cut-out

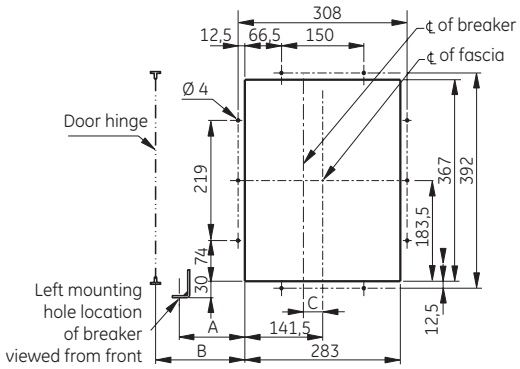

Breaker type	DIM "A"	DIM "B" minimum	DIM "C"
Envelope 3 3 pole	222.5	259.5	8.0
Envelope 3 4 pole	337.5	374.5	8.0

Standard Connection pads
Horizontal maximum 5000A

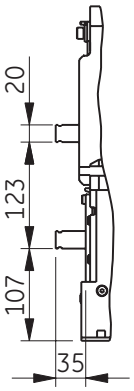

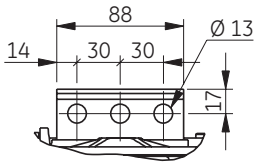

Standard Connection pads
Vertical maximum 6400A

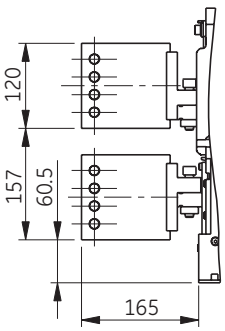

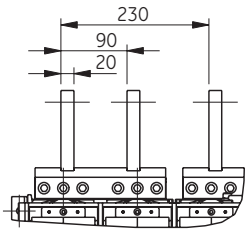

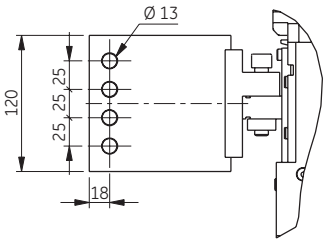

Remarks

A - 6 mounting holes of Ø 9.5mm
B - Please refer to section D for clearance distances

Unelec Equipment
www.unelec-equipment.com
Tel: +1 319 244 84 69 UeeS Co. Tel: +1 650 466 86 39
Info@unelec-equipment.com

Envelope 3 - Draw-out pattern

Front view 4pole

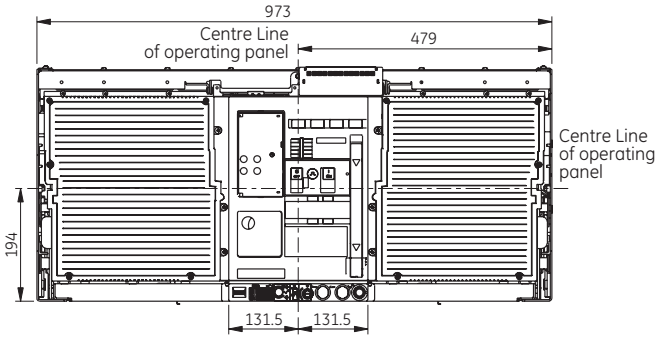

Front view 3pole

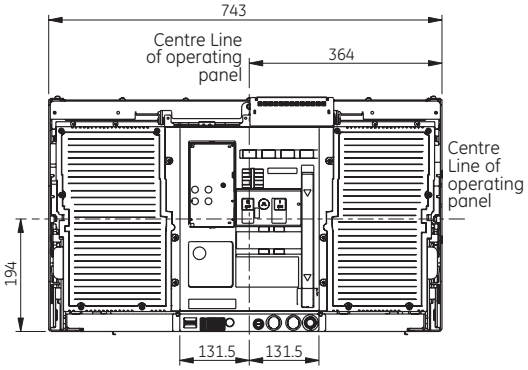

Top view 4pole

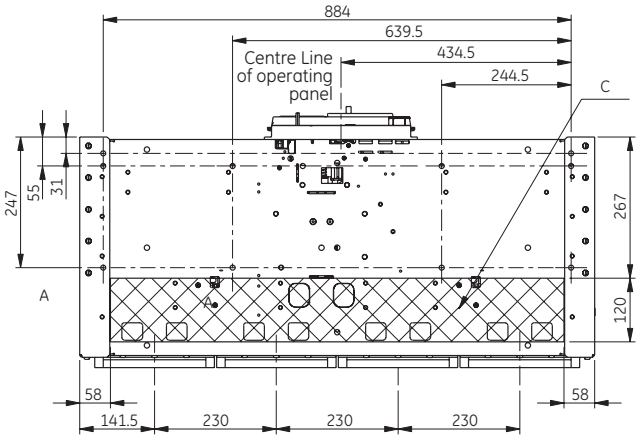

Top view 3pole

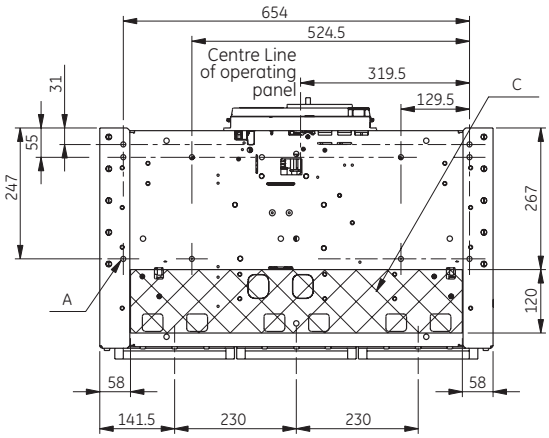

Unelec Equipment
www.unelec-equipment.com
Tel: +1 319 244 84 69 UeeS Co. Tel: +1 650 466 86 39
Info@unelec-equipment.com

Envelope 3 - Draw-out pattern

Side view

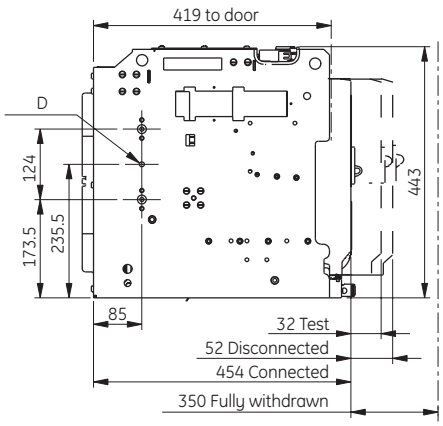

Door cut-out

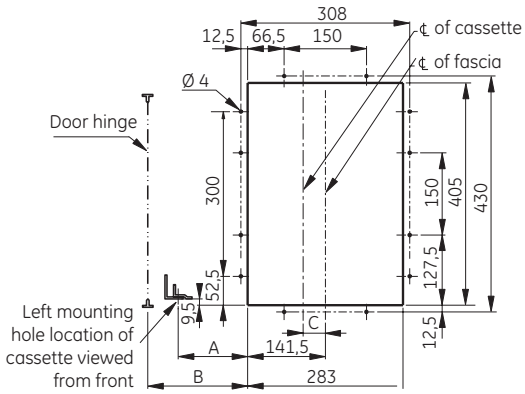

Breaker type	DIM "A"	DIM "B" minimum	DIM "C"
Envelope 3 3 pole	193.5	267.0	8.0
Envelope 3 4 pole	308.5	382.0	8.0

Standard Connection pads
Horizontal maximum 5000A

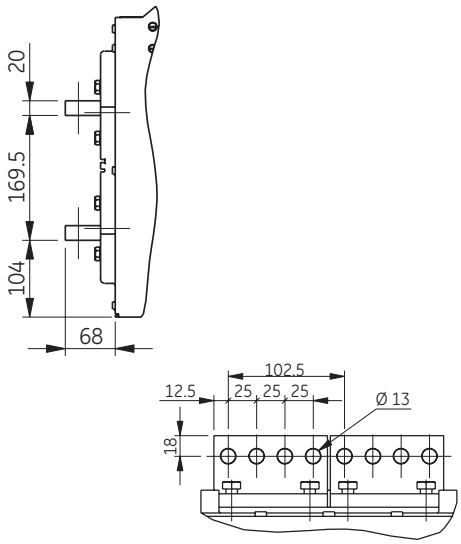

Standard Connection pads
Vertictal maximum 6400A

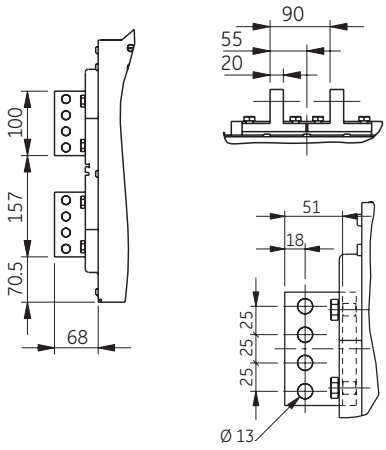

Remarks

A - 6 mounting holes of Ø 9.5mm
C - Please leave unobstructed; Required for ventilation
D - 1 hole M6 Left & Right for earthing

Unelec Equipment
www.unelec-equipment.com
Tel: +1 319 244 84 69 UeeS Co. Tel: +1 650 466 86 39
Info@unelec-equipment.com

IP54 Flange, Time Delay Module UVR, 24V Power Supply

IP54 Flange

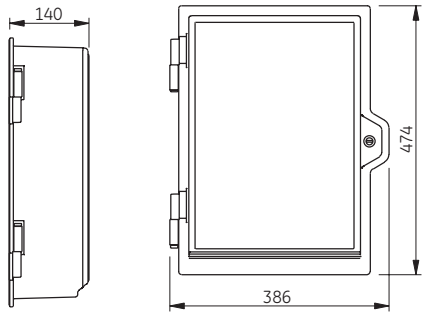

IP54 Flange drilling

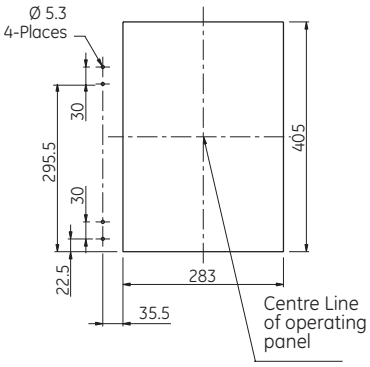

Time delay Module (UVR)

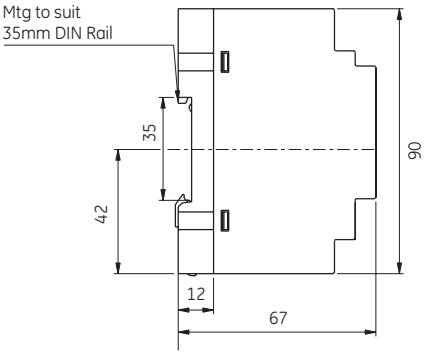

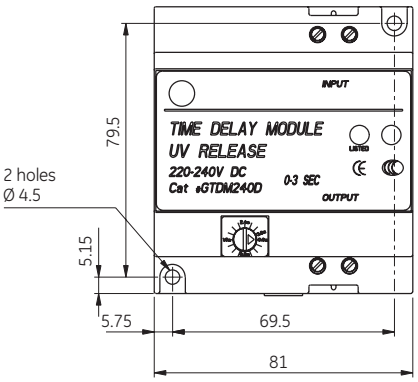

External 24V DC Power Supply

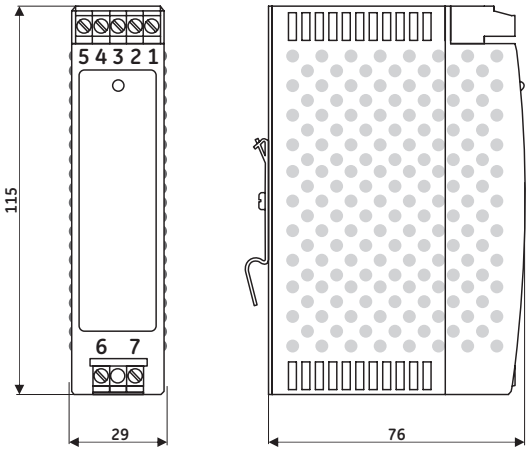

Unelec Equipment
www.unelec-equipment.com
Tel: +1 319 244 84 69 UeeS Co. Tel: +1 650 466 86 39
Info@unelec-equipment.com

Rogowski's, Current Transformers, Door Interlock system and Mounting Brackets

Rogowski Coil external

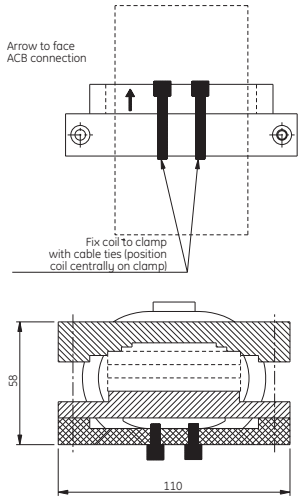

Remark: for ratings > 4000A two coils are used

Current Transformer external

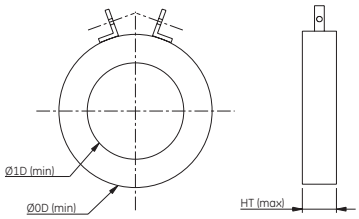

Rating	1D	0D	HT
400A	94	144	24
630A	85	135	30
2000A	87	151	31
3200A	84	154	34
4000A	81	154	57
5000A	85	198	58
6400A	85	210	65

Door Interlock system

Envelope T

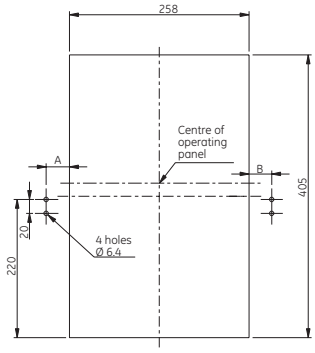

Frame	A & B
3P	30
4P	100

Envelope 1/2/3

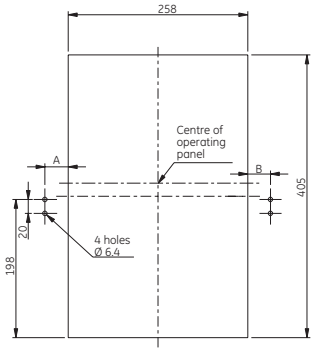

Frame	A	B
F1-3P	33.5	32.5
F1-4P	33.5	132.5
F2-3P	98.5	67.5
F2-4P	98.5	197.5
F3-3P	240.5	225.5
F3-4P	355.5	340.5

Front mounting brackets (fixed pattern, drawings include front connection option)

Envelope 1

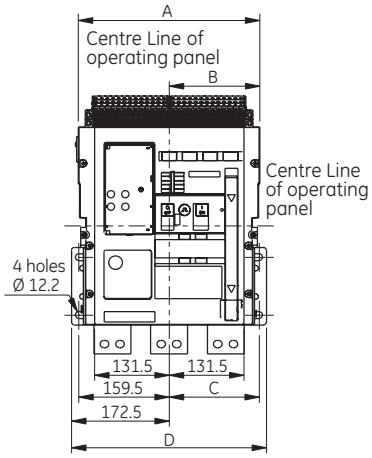

Envelope 2

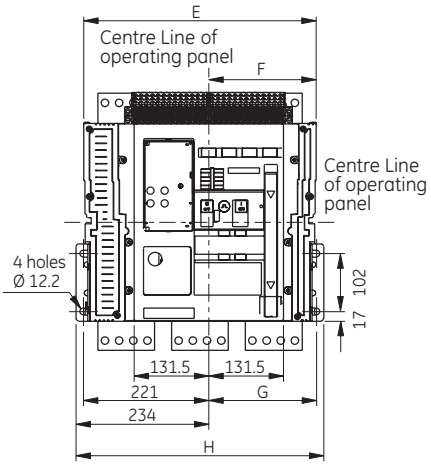

	3 pole	4 pole
A	320	420
B	159.5	259.5
C	158.5	258.5
D	344	444
E	410	540
F	189.5	319.5
G	190	320
H	437	567

Unelec Equipment
www.unelec-equipment.com
Tel: +1 319 244 84 69 UeeS Co. Tel: +1 650 466 86 39
Info@unelec-equipment.com

Interlocking with Cable systems; 2 way

Fixed pattern 2-way cable interlock / Fixed pattern - Front/rear access

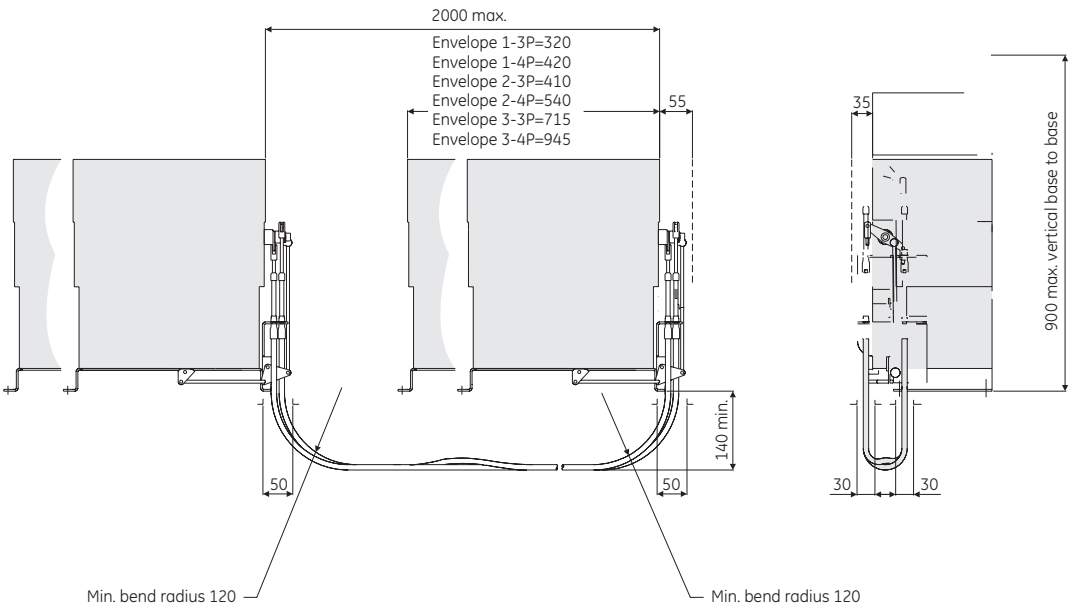

Draw-out 2-way cable interlock / Withdrawable pattern - Front/rear access

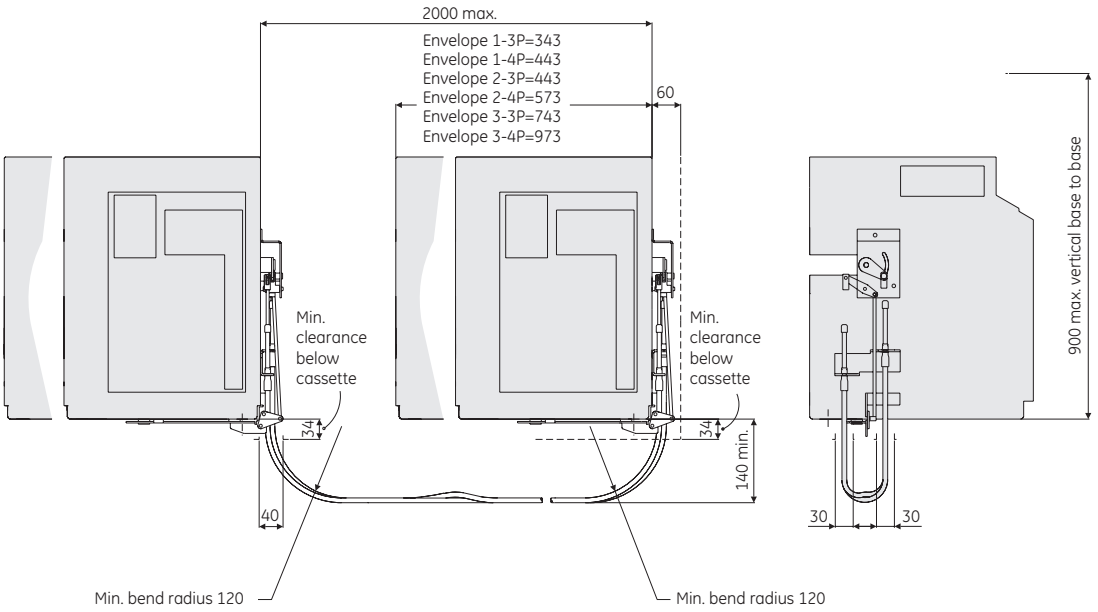

Unelec Equipment
www.unelec-equipment.com
Tel: +1 319 244 84 69 UeeS Co. Tel: +1 650 466 86 39
Info@unelec-equipment.com

Interlocking with Cable systems; 3 way

Fixed pattern 3-way cable interlock / Fixed pattern - Front/rear access

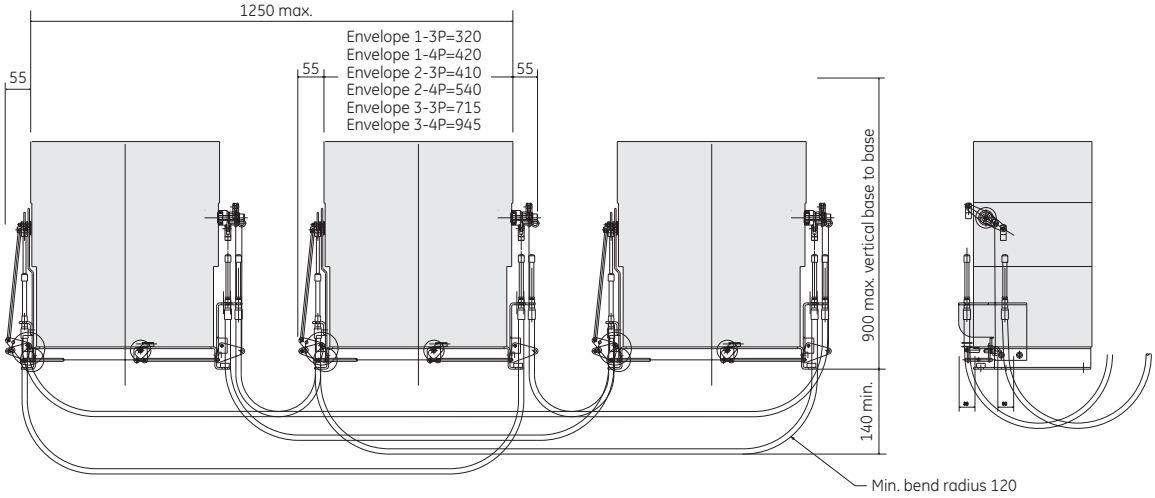

Draw-out 3-way cable interlock / Withdrawable pattern - Front/rear access

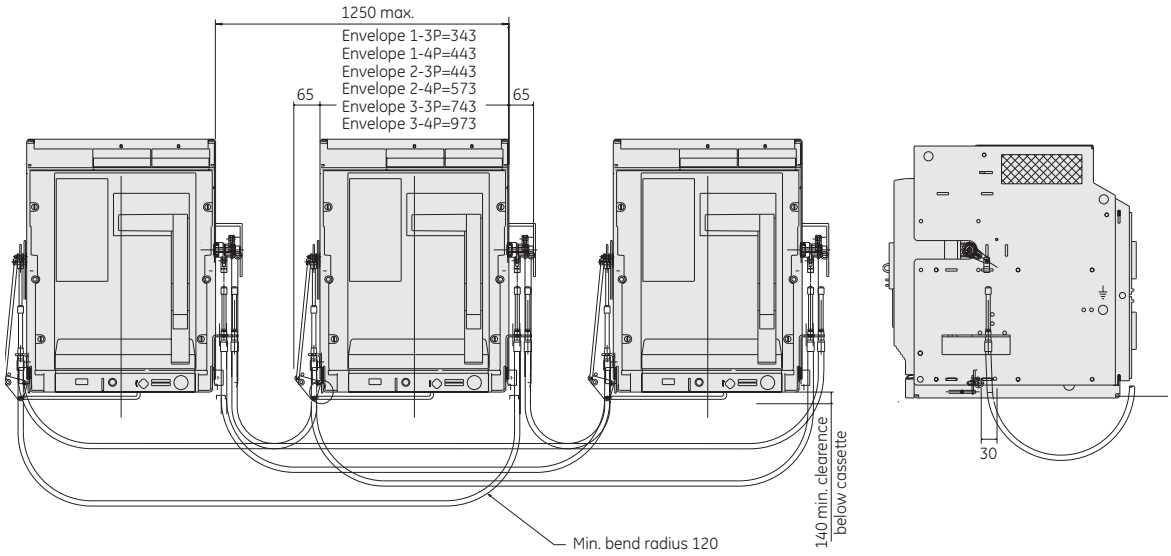

Unelec Equipment
www.unelec-equipment.com
Tel: +1 319 244 84 69 UeeS Co. Tel: +1 650 466 86 39
Info@unelec-equipment.com

By reference number

Ref. No.	Cat. No.	Page
407000		
407001	GG04E1	A.9
407002	GG04E3	A.9
407003	GG04E4	A.4
407004	GG04E6	A.4
407005	GG04H1	A.9
407006	GG04H3	A.9
407007	GG04H4	A.4
407008	GG04H6	A.4
407009	GG04M1	A.10
407010	GG04M3	A.10
407011	GG04M4	A.5
407012	GG04M6	A.5
407013	GG04N1	A.9
407014	GG04N3	A.9
407015	GG04N4	A.4
407016	GG04N6	A.4
407017	GG04S1	A.9
407018	GG04S3	A.9
407019	GG04S4	A.4
407020	GG04S6	A.4
407030	GG07E1	A.9
407031	GG07E3	A.9
407032	GG07E4	A.4
407033	GG07E6	A.4
407034	GG07H1	A.9
407035	GG07H3	A.9
407036	GG07H4	A.4
407037	GG07H6	A.4
407038	GG07M1	A.10
407039	GG07M3	A.10
407040	GG07M4	A.5
407041	GG07M6	A.5
407042	GG07N1	A.9
407043	GG07N3	A.9
407044	GG07N4	A.4
407045	GG07N6	A.4
407046	GG07S1	A.9
407047	GG07S3	A.9
407048	GG07S4	A.4
407049	GG07S6	A.4
407056	GCPSAR	A.24
407060	GG08E1	A.9
407061	GG08E3	A.9
407062	GG08E4	A.4
407063	GG08E6	A.4
407064	GG08H1	A.9
407065	GG08H3	A.9
407066	GG08H4	A.4
407067	GG08H6	A.4
407068	GG08M1	A.10
407069	GG08M3	A.10
407070	GG08M4	A.5
407071	GG08M6	A.5
407072	GG08N1	A.9
407073	GG08N3	A.9
407074	GG08N4	A.4
407075	GG08N6	A.4
407076	GG08S1	A.9
407077	GG08S3	A.9
407078	GG08S4	A.4
407079	GG08S6	A.4
407081	GTUTK20S	A.26
407083	GTUTKS	A.26
407090	GG10E1	A.9
407091	GG10E3	A.9
407092	GG10E4	A.4
407093	GG10E6	A.4
407094	GG10H1	A.9
407095	GG10H3	A.9
407096	GG10H4	A.4
407097	GG10H6	A.4
407098	GG10M1	A.10
407099	GG10M3	A.10
407100	GG10M4	A.5
407101	GG10M6	A.5
407102	GG10N1	A.9
407103	GG10N3	A.9
407104	GG10N4	A.4
407105	GG10N6	A.4
407106	GG10S1	A.9
407107	GG10S3	A.9
407108	GG10S4	A.4

Ref. No.	Cat. No.	Page
407109	GG10S6	A.4
407120	GG13E1	A.9
407121	GG13E3	A.9
407122	GG13E4	A.4
407123	GG13E6	A.4
407124	GG13H1	A.9
407125	GG13H3	A.9
407126	GG13H4	A.4
407127	GG13H6	A.4
407128	GG13M1	A.10
407129	GG13M3	A.10
407130	GG13M4	A.5
407131	GG13M6	A.5
407132	GG13N1	A.9
407133	GG13N3	A.9
407134	GG13N4	A.4
407135	GG13N6	A.4
407136	GG13S1	A.9
407137	GG13S3	A.9
407138	GG13S4	A.4
407139	GG13S6	A.4
407150	GG16E1	A.9
407151	GG16E3	A.9
407152	GG16E4	A.4
407153	GG16E6	A.4
407154	GG16H1	A.9
407155	GG16H3	A.9
407156	GG16H4	A.4
407157	GG16H6	A.4
407158	GG16M1	A.10
407159	GG16M3	A.10
407160	GG16M4	A.5
407161	GG16M6	A.5
407162	GG16N1	A.9
407163	GG16N3	A.9
407164	GG16N4	A.4
407165	GG16N6	A.4
407166	GG16S1	A.9
407167	GG16S3	A.9
407168	GG16S4	A.4
407169	GG16S6	A.4
407190	GG20E1	A.9
407191	GG20E3	A.9
407192	GG20E4	A.4
407193	GG20E6	A.4
407194	GG20H1	A.9
407195	GG20H3	A.9
407196	GG20H4	A.4
407197	GG20H6	A.4
407198	GG20M1	A.10
407199	GG20M3	A.10
407200	GG20M4	A.5
407201	GG20M6	A.5
407202	GG20N1	A.9
407203	GG20N3	A.9
407204	GG20N4	A.4
407205	GG20N6	A.4
407206	GG20S1	A.9
407207	GG20S3	A.9
407208	GG20S4	A.4
407209	GG20S6	A.4
407230	GG25H1	A.9
407231	GG25H3	A.9
407232	GG25H4	A.4
407233	GG25H6	A.4
407234	GG25M1	A.10
407235	GG25M3	A.10
407236	GG25M4	A.5
407237	GG25M6	A.5
407238	GG25N1	A.9
407239	GG25N3	A.9
407240	GG25N4	A.4
407241	GG25N6	A.4
407242	GG32H1	A.9
407244	GG32H4	A.4
407245	GG32H6	A.4
407248	GG32L1	A.10
407249	GG32L3	A.10
407250	GG32G1	A.10
407251	GG32G3	A.10
407252	GG32G4	A.5
407253	GG32G6	A.5
407254	GG32L4	A.5

Ref. No.	Cat. No.	Page
407255	GG32L6	A.5
407260	GG32M1	A.10
407261	GGM3M3	A.10
407262	GG32M4	A.5
407263	GG32M6	A.5
407264	GG32N1	A.9
407265	GG32N3	A.9
407266	GG32N4	A.4
407267	GG32N6	A.4
407268	GG40G1	A.10
407269	GG40G3	A.10
407270	GG40G4	A.5
407271	GG40G6	A.5
407273	GG32H3	A.9
407278	GG40H1	A.9
407279	GG40H3	A.9
407280	GG40H4	A.4
407281	GG40H6	A.4
407282	GG40L1	A.10
407283	GG40L3	A.10
407284	GG40L4	A.5
407285	GG40L6	A.5
407286	GG40M1	A.10
407287	GG40M3	A.10
407288	GG40M4	A.5
407289	GG40M6	A.5
407290	GG40N1	A.9
407291	GG40N3	A.9
407292	GG40N4	A.4
407293	GG40N6	A.4
407300	GG50L1	A.10
407301	GG50L3	A.10
407302	GG50L4	A.5
407303	GG50L6	A.5
407304	GG50M1	A.10
407305	GG50M3	A.10
407306	GG50M4	A.5
407307	GG50M6	A.5
407320	GG64L1	A.10
407321	GG64L3	A.10
407322	GG64L4	A.5
407323	GG64L6	A.5
407324	GG64M1	A.10
407325	GG64M3	A.10
407326	GG64M4	A.5
407327	GG64M6	A.5
407346	GH32H1	A.11
407347	GH32H3	A.11
407348	GH32M1	A.11
407349	GH32M3	A.11
407350	GH32N1	A.11
407351	GH32N3	A.11
407352	GH40H1	A.11
407353	GH40H3	A.11
407354	GH40M1	A.11
407355	GH40M3	A.11
407356	GH40N1	A.11
407357	GH40N3	A.11
407374	GW04N1	A.12
407375	GW04N3	A.12
407376	GW04N4	A.6
407377	GW04N6	A.6
407378	GJ04S1	A.12
407379	GJ04S3	A.12
407380	GJ04S4	A.6
407381	GJ04S6	A.6
407394	GW07N1	A.12
407395	GW07N3	A.12
407396	GW07N4	A.6
407397	GW07N6	A.6
407398	GJ07S1	A.12
407399	GJ07S3	A.12
407400	GJ07S4	A.6
407401	GJ07S6	A.6
407414	GW08N1	A.12
407415	GW08N3	A.12
407416	GW08N4	A.6
407417	GW08N6	A.6
407418	GJ08S1	A.12
407419	GJ08S3	A.12
407420	GJ08S4	A.6
407421	GJ08S6	A.6
407434	GW10N1	A.12

Ref. No.	Cat. No.	Page
407435	GW10N3	A.12
407436	GW10N4	A.6
407437	GW10N6	A.6
407438	GJ10S1	A.12
407439	GJ10S3	A.12
407440	GJ10S4	A.6
407441	GJ10S6	A.6
407454	GW13N1	A.12
407455	GW13N3	A.12
407456	GW13N4	A.6
407457	GW13N6	A.6
407458	GJ13S1	A.12
407459	GJ13S3	A.12
407460	GJ13S4	A.6
407461	GJ13S6	A.6
407474	GW16N1	A.12
407475	GW16N3	A.12
407476	GW16N4	A.6
407477	GW16N6	A.6
407478	GJ16S1	A.12
407479	GJ16S3	A.12
407480	GJ16S4	A.6
407481	GJ16S6	A.6
407494	GW20N1	A.12
407495	GW20N3	A.12
407496	GW20N4	A.6
407497	GW20N6	A.6
407498	GJ20S1	A.12
407499	GJ20S3	A.12
407500	GJ20S4	A.6
407501	GJ20S6	A.6
407518	GJ25N1	A.12
407519	GJ25N3	A.12
407520	GJ25N4	A.6
407521	GJ25N6	A.6
407533	GJ32L1	A.12
407534	GJ32L3	A.12
407535	GJ32L4	A.6
407536	GJ32L6	A.6
407537	GJ32N1	A.12
407538	GJ32N3	A.12
407539	GJ32N4	A.6
407540	GJ32N6	A.6
407554	GJ40L1	A.12
407555	GJ40L3	A.12
407556	GJ40L4	A.6
407557	GJ40L6	A.6
407558	GJ40N1	A.12
407559	GJ40N3	A.12
407560	GJ40N4	A.6
407561	GJ40N6	A.6
407565	GJ50L1	A.12
407566	GJ50L3	A.12
407567	GJ50L4	A.6
407568	GJ50L6	A.6
407575	GJ64L1	A.12
407576	GJ64L3	A.12
407577	GJ64L4	A.6
407578	GJ64L6	A.6
407589	GZ32H1	A.13
407590	GZ32H3	A.13
407591	GK32N1	A.13
407592	GK32N3	A.13
407593	GZ40H1	A.13
407594	GZ40H3	A.13
407595	GK40N1	A.13
407596	GK40N3	A.13
407606	G20H2SSL	A.32
407607	G20H5SSL	A.32
407610	GG16H2FR	A.29
407612	GG16H2UR	A.29
407613	GG16H5FR	A.29
407615	GG16H5UR	A.29
407616	GG16S2UM	A.14
407617	GG16S2UR	A.29
407618	GG16S5UM	A.14
407619	GG16S5UR	A.29
407620	GG20H2FR	A.29
407622	GG20H2UR	A.29
407623	GG20H5FR	A.29
407625	GG20H5UR	A.29
407626	GG16S2FM	A.14
407627	GG16S2FR	A.29

Unelec Equipment
www.unelec-equipment.com
Tel: +1 319 244 84 69 UeeS Co. Tel: +1 650 466 86 39
Info@unelec-equipment.com

Ref. No.	Cat. No.	Page
407628	GG16S5FM	A.14
407629	GG16S5FR	A.29
407630	GG20M2FR	A.29
407632	GG20M2UR	A.29
407633	GG20M5FR	A.29
407635	GG20M5UR	A.29
407636	G40M2SSL	A.32
407637	G40M5SSL	A.32
407640	GG25M2FR	A.29
407642	GG25M2UR	A.29
407643	GG25M5FR	A.29
407645	GG25M5UR	A.29
407650	GG32M2FR	A.29
407652	GG32M2UR	A.29
407654	GG32M5FR	A.29
407656	GG32M5UR	A.29
407658	GG40M2FR	A.29
407666	GG40M2UR	A.29
407668	GG40M5FR	A.29
407670	GG40M5UR	A.29
407679	G64L2SSL	A.32
407680	G64L5SSL	A.32
407686	GG64L2UR	A.29
407688	GG64L5UR	A.29
407700	GM01024D	A.22
407701	GM01024DR	A.24
407702	GM01048D	A.22
407703	GM01048DR	A.24
407704	GM01060D	A.22
407705	GM01060DR	A.24
407706	GM01110D	A.22
407707	GM01110DR	A.24
407708	GM01250D	A.22
407709	GM01250DR	A.24
407710	GM01048A	A.22
407711	GM01048DR	A.24
407712	GM01120A	A.22
407713	GM01120DR	A.24
407714	GM01240A	A.22
407715	GM01240DR	A.24
407716	GM01400A	A.22
407717	GM01400DR	A.24
407718	GM01440A	A.22
407719	GM01440DR	A.24
407720	GM01220D	A.22
407721	GM01220DR	A.24
407722	GM02220D	A.22
407723	GM02220DR	A.24
407725	GM02024D	A.22
407726	GM02024DR	A.24
407727	GM02048D	A.22
407728	GM02048DR	A.24
407729	GM02060D	A.22
407730	GM02060DR	A.24
407731	GM02110D	A.22
407732	GM02110DR	A.24
407733	GM02250D	A.22
407734	GM02250DR	A.24
407735	GM02048A	A.22
407736	GM02048DR	A.24
407737	GM02120A	A.22
407738	GM02120DR	A.24
407739	GM02240A	A.22
407740	GM02240DR	A.24
407741	GM02400A	A.22
407742	GM02400DR	A.24
407743	GM02440A	A.22
407744	GM02440DR	A.24
407753	GNTK120	A.22
407754	GNTK240	A.22
407760	GRRC024D	A.22
407762	GRRC110	A.22
407764	GRRC230	A.22
407770	GSTR024D	A.22
407771	GSTR024D	A.24
407772	GSTR048	A.22
407773	GSTR048	A.24
407774	GSTR060D	A.22
407775	GSTR060D	A.24
407776	GSTR120	A.22
407777	GSTR120	A.24
407778	GSTR240	A.22
407779	GSTR240	A.24

Ref. No.	Cat. No.	Page
407780	GSTR277	A.22
407781	GSTR277	A.24
407782	GSTR400A	A.22
407783	GSTR400A	A.24
407784	GSTR440A	A.22
407785	GSTR440A	A.24
407789	GSST024	A.22
407790	GSST024R	A.24
407791	GSST120	A.22
407792	GSST120R	A.24
407793	GSST240	A.22
407794	GSST240R	A.24
407795	GUVT024D	A.22
407796	GUVT024DR	A.24
407797	GUVT048	A.22
407798	GUVT048R	A.24
407799	GUVT060D	A.22
407800	GUVT060DR	A.24
407801	GUVT120	A.22
407802	GUVT120R	A.24
407803	GUVT240	A.22
407804	GUVT240R	A.24
407805	GUVT277	A.22
407806	GUVT277R	A.24
407807	GUVT400A	A.22
407808	GUVT400AR	A.24
407809	GUVT440A	A.22
407810	GUVT440AR	A.24
407816	GTDM048A	A.26
407817	GTDM060D	A.26
407818	GTDM120A	A.26
407819	GTDM120D	A.26
407820	GTDM240A	A.26
407821	GTDM240D	A.26
407822	GTDM277A	A.26
407823	GTDM250D	A.26
407824	GTDM400A	A.26
407825	GTDM440A	A.26
407835	GCCC024DR	A.24
407836	GCCC024D	A.22
407837	GCCC048R	A.24
407838	GCCC048	A.22
407839	GCCC060DR	A.24
407840	GCCC060D	A.22
407841	GCCC120R	A.24
407842	GCCC120	A.22
407843	GCCC240R	A.24
407844	GCCC240	A.22
407849	GCCC277	A.22
407850	GCCC277R	A.24
407851	GCCC400AR	A.24
407852	GCCC400A	A.22
407853	GCCC440A	A.22
407854	GCCC440AR	A.24
407860	GCCN024DR	A.24
407861	GCCN024D	A.22
407862	GCCN048R	A.24
407863	GCCN048	A.22
407864	GCCN060DR	A.24
407865	GCCN060D	A.22
407866	GCCN120R	A.24
407867	GCCN120	A.22
407868	GCCN240R	A.24
407869	GCCN240	A.22
407870	GCCN277	A.22
407871	GCCN277R	A.24
407876	GCCN400AR	A.24
407877	GCCN400A	A.22
407878	GCCN440A	A.22
407879	GCCN440AR	A.24
407880	GAS3R	A.24
407881	GAS5R	A.24
407882	GAS6R	A.24
407883	GAS8R	A.24
407886	GAS5	A.22
407887	GAS6	A.22
407888	GAS8	A.22
407889	GBAT1R	A.24
407890	GBATS1	A.22
407891	GBAT1	A.22
407894	GRTC3	A.22
407895	GCSP1	A.22
407896	GCSP2	A.22

Ref. No.	Cat. No.	Page
407897	GRTC1	A.22
407899	GRTC2	A.22
407900	GI2FAD	A.23
407901	GI2WAD	A.23
407902	GI3FB	A.23
407903	GI3WB	A.23
407904	GI3FC	A.23
407905	GI3WC	A.23
407906	GI3FDT	A.23
407907	GI3WDT	A.23
407911	GRTC4	A.22
407912	GRTC5	A.22
407913	GRTC6	A.22
407915	GCSP1R	A.24
407916	GCSP2R	A.24
407924	GCPS1R	A.24
407925	GCPS2R	A.24
407930	G16H4ED	A.26
407931	G16H6ED	A.26
407932	G20H4ED	A.26
407933	G20H6ED	A.26
407934	G40M4ED	A.26
407935	G40M6ED	A.26
407936	G64M4ED	A.26
407937	G64M6ED	A.26
407967	GBCASR	A.25
407968	GBRONR	A.25
407970	GBCAS	A.23
407971	GBRON	A.23
407974	GCRONR	A.25
407976	GCRON	A.23
407978	GBPRO	A.23
407979	GBPROR	A.25
407980	GCPRO	A.23
407981	GCPROR	A.25
407984	GRONCS	A.32
407985	GRON	A.25
407986	GCAS	A.25
407987	GPRO	A.25
407990	GCB1	A.26
407991	GCB2	A.26
407992	GCB3	A.26
407993	GCB4	A.26
407994	GCB5	A.26
407995	GCB6	A.26
407996	GCB7	A.26
407999	GTUTK20	A.26
408000		
408000	G04HNRC	A.28
408001	G07HNRC	A.28
408002	G08HNRC	A.28
408003	G10HNRC	A.28
408004	G13HNRC	A.28
408005	G16HNRC	A.28
408006	G20HNCT	A.28
408025	GDPRF	A.27
408026	GDPRW	A.27
408028	GFA4	A.32
408030	GSFDTR2	A.32
408033	GMCNR	A.25
408035	GMCN	A.23
408036	GCNTW	A.27
408038	G54DR	A.27
408039	GLHD	A.27
408040	GPBD	A.27
408041	GREPM	A.27
408042	GRHD	A.27
408043	GRHN	A.32
408045	GLB1	A.27
408046	GTUS	A.26
408047	GUNI	A.32
408049	GLB3	A.27
408052	GSFDTR1	A.32
408054	GSDWTR	A.32
408057	GJP	A.27
408058	G16H4RVI	A.7
408059	G20H4RVI	A.7
408060	G16H4FFI	A.7
408061	G20H4FFI	A.7
408062	G16H6FFI	A.7
408063	G20H6FFI	A.7
408066	G32M4FFI	A.7
408067	G40M4FFI	A.7

Ref. No.	Cat. No.	Page
408068	G32M6FFI	A.7
408069	G40M6FFI	A.7
408070	G32M4RVI	A.7
408071	G32M6RVI	A.7
408072	G40M4RVI	A.7
408073	G64L4RVI	A.7
408074	G40M6RVI	A.7
408075	G64L6RVI	A.7
408082	G16H6RVI	A.7
408083	G20H6RVI	A.7
408085	GFMTG	A.7
408097	G13HCLS	A.32
408098	G20HARC	A.32
408100	G16HCLS	A.32
408102	G20HCHT	A.32
408103	G20HCLS	A.32
408104	G20NARC	A.32
408106	G20MCLS	A.32
408109	G25MCLS	A.32
408117	G32MCLS	A.32
408120	G40MCLS	A.32
408131	G40MCHT	A.32
408144	G64LCHT	A.32
408145	G50LCLS	A.32
408148	G64LCLS	A.32
408162	G25MNRC	A.28
408169	G40MARC	A.32
408172	G40NARC	A.32
408186	G32LNRC	A.28
408187	G40LNRC	A.28
408188	G50LNRC	A.28
408189	G64LNRC	A.28
408193	G64LARC	A.32
408200	GG16H2FM	A.14
408202	GG16H2UM	A.14
408203	GG16H5FM	A.14
408205	GG16H5UM	A.14
408210	GG20H2FM	A.14
408212	GG20H2UM	A.14
408213	GG20H5FM	A.14
408215	GG20H5UM	A.14
408222	GG20M2FM	A.14
408224	GG20M2UM	A.14
408225	GG20M5FM	A.14
408227	GG20M5UM	A.14
408234	GG25M2FM	A.14
408236	GG25M2UM	A.14
408237	GG25M5FM	A.14
408239	GG25M5UM	A.14
408245	GG32M2FM	A.14
408247	GG32M2UM	A.14
408249	GG32M5FM	A.14
408251	GG32M5UM	A.14
408254	GH32M2VR	A.29
408255	GH32M5VR	A.29
408257	GG40M2FM	A.14
408259	GG40M2UM	A.14
408261	GG40M5FM	A.14
408263	GG40M5UM	A.14
408267	GH40M2VR	A.29
408268	GH40M5VR	A.29
408281	GG64L2UM	A.14
408283	GG64L5UM	A.14
408292	GH32M2VM	A.14
408293	GH32M5VM	A.14
408294	GH40M2VM	A.14
408295	GH40M5VM	A.14
408300	G04HNCT	A.28
408301	G07HNCT	A.28
408302	G08HNCT	A.28
408303	G10HNCT	A.28
408304	G13HNCT	A.28
408305	G16HNCT	A.28
408322	G25MNCT	A.28
408331	G32LNCT	A.28
408332	G40LNCT	A.28
408333	G50LNCT	A.28
408334	G64LNCT	A.28
408350	GW04M4	A.6
408351	GW04M6	A.6
408352	GW07M4	A.6
408353	GW07M6	A.6
408354	GW08M4	A.6

Unelec Equipment
www.unelec-equipment.com
Tel: +1 319 244 84 69 UeeS Co. Tel: +1 650 466 86 39
Info@unelec-equipment.com

By reference number

Ref. No.	Cat. No.	Page
408355	GW08M6	A.6
408356	GW10M4	A.6
408357	GW10M6	A.6
408358	GW13M4	A.6
408359	GW13M6	A.6
408360	GW16M4	A.6
408361	GW16M6	A.6
408362	GW20M4	A.6
408363	GW20M6	A.6
408364	GW25M4	A.6
408365	GW25M6	A.6
408366	GW32M4	A.6
408367	GW32M6	A.6
408368	GW40M4	A.6
408369	GW40M6	A.6
408400	GW04M1	A.12
408401	GW04M3	A.12
408402	GW07M1	A.12
408403	GW07M3	A.12
408404	GW08M1	A.12
408405	GW08M3	A.12
408406	GW10M1	A.12
408407	GW10M3	A.12
408408	GW13M1	A.12
408409	GW13M3	A.12
408410	GW16M1	A.12
408411	GW16M3	A.12
408412	GW20M1	A.12
408413	GW20M3	A.12
408414	GW25M1	A.12
408415	GW25M3	A.12
408416	GW32M1	A.12
408417	GW32M3	A.12
408418	GW40M1	A.12
408419	GW40M3	A.12
408750	GTG00NDT5SF	A.20
408751	GTG00NDT8SF	A.20
408753	GTG00NDT9SF	A.20
408755	GTG00ND-5SF	A.20
408756	GTG00ND-8SF	A.20
408757	GTG00ND-9SF	A.20
408758	GTG00NDT8SF	A.20
408759	GTG00NFT8SF	A.20
408761	GTG00NFT9SF	A.20
408763	GTG00NF-5SF	A.20
408764	GTG00NF-8SF	A.20
408765	GTG00NF-9SF	A.20
408789	GAPU	A.26
408790	GMPU1	A.26
408791	GMPU2	A.26
408792	GMPU3	A.26
408796	G3G00KA-SR	A.31
408800	GTG00K1-SF	A.15
408801	GTG00K2-SF	A.15
408802	GTG00K2-SR	A.30
408803	GTG00K9-SF	A.15
408805	GTG00K3-SF	A.15
408806	GTG00K4-SF	A.15
408807	GTG00K3-2SF	A.15
408808	GTG00K4-2SF	A.15
408809	GTG00K4-2SR	A.30
408813	GTG00K9-4SF	A.16
408815	GTG00K3-4SF	A.16
408816	GTG00K4-4SF	A.16
408817	GTG00K3T6SF	A.16
408818	GTG00K4T6SF	A.16
408819	GTG00K4T6SR	A.30
408823	GTG00N9-5SF	A.17
408825	GTG00N5-5SF	A.17
408826	GTG00N6-5SF	A.19
408827	GTG00N7-5SF	A.18
408828	GTG00N8-5SF	A.19
408829	GTG00N5T5SF	A.17
408830	GTG00N6T5SF	A.19
408831	GTG00N7T5SF	A.18
408832	GTG00N8T5SF	A.19
408833	GTG00N5-8SF	A.17
408834	GTG00N6-8SF	A.19
408835	GTG00N7-8SF	A.18
408836	GTG00N8-8SF	A.19
408837	GTG00N5T8SF	A.17
408838	GTG00N6T8SF	A.19
408839	GTG00N7T8SF	A.18
408840	GTG00N8T8SF	A.19

Ref. No.	Cat. No.	Page
408841	GTG00N5-9SF	A.17
408842	GTG00N6-9SF	A.19
408843	GTG00N7-9SF	A.18
408844	GTG00N8-9SF	A.19
408845	GTG00N5T9SF	A.17
408846	GTG00N6T9SF	A.19
408847	GTG00N7T9SF	A.18
408848	GTG00N8T9SF	A.19
408849	GTG00N5T8SR	A.31
408850	GTG00N6T8SR	A.31
408851	GTG00N7T8SR	A.31
408852	GTG00N8T8SR	A.31
408853	GTG00N5T9SR	A.31
408854	GTG00N6T9SR	A.31
408855	GTG00N7T9SR	A.31
408856	GTG00N8T9SR	A.31
408860	GTPUNI	A.15
408863	GTG00N9-8SF	A.17
408865	GTG00N9-9SF	A.17
444000		
444247	GMT0048A	A.22
444248	GMT0060D	A.22
444249	GMT0110D	A.22
444250	GMT0120A	A.22
444251	GMT0220D	A.22
444252	GMT0250D	A.22
444253	GT16N2SSL	A.32
444254	GT16N5SSL	A.32
444255	GTJP	A.27
444256	GTLHD	A.27
444257	GTRHD	A.27
444258	GTSDFTR	A.32
444259	GTSDWTR	A.32
444500	GT04R1	A.9
444501	GT07R1	A.9
444502	GT08R1	A.9
444503	GT10R1	A.9
444504	GT13R1	A.9
444505	GT16R1	A.9
444506	GT04K1	A.9
444507	GT07K1	A.9
444508	GT08K1	A.9
444509	GT10K1	A.9
444510	GT13K1	A.9
444511	GT16K1	A.9
444520	GT04R3	A.9
444521	GT07R3	A.9
444522	GT08R3	A.9
444523	GT10R3	A.9
444524	GT13R3	A.9
444525	GT16R3	A.9
444526	GT04K3	A.9
444527	GT07K3	A.9
444528	GT08K3	A.9
444529	GT10K3	A.9
444530	GT13K3	A.9
444531	GT16K3	A.9
444542	GT04R4	A.4
444543	GT07R4	A.4
444544	GT08R4	A.4
444545	GT10R4	A.4
444546	GT13R4	A.4
444547	GT16R4	A.4
444548	GT04K4	A.4
444549	GT07K4	A.4
444550	GT08K4	A.4
444551	GT10K4	A.4
444552	GT13K4	A.4
444553	GT16K4	A.4
444563	GT04R6	A.4
444564	GT07R6	A.4
444565	GT08R6	A.4
444566	GT10R6	A.4
444567	GT13R6	A.4
444568	GT16R6	A.4
444569	GT04K6	A.4
444570	GT07K6	A.4
444571	GT08K6	A.4
444572	GT10K6	A.4
444573	GT13K6	A.4
444574	GT16K6	A.4
444585	G704R1	A.12
444586	G707R1	A.12
444587	G708R1	A.12

Ref. No.	Cat. No.	Page
444588	G710R1	A.12
444589	G713R1	A.12
444590	G716R1	A.12
444600	G704R3	A.12
444601	G707R3	A.12
444602	G708R3	A.12
444603	G710R3	A.12
444604	G713R3	A.12
444605	G716R3	A.12
444616	G704R4	A.6
444617	G707R4	A.6
444618	G708R4	A.6
444619	G710R4	A.6
444620	G713R4	A.6
444621	G716R4	A.6
444625	GT16H4FFI	A.7
444626	GT16H4RVI	A.7
444627	GT16H6FFI	A.7
444628	GT16H6RVI	A.7
444630	GMT0024D	A.22
444631	GMT0048D	A.22
444632	G704R6	A.6
444633	G707R6	A.6
444634	G708R6	A.6
444635	G710R6	A.6
444636	G713R6	A.6
444637	G716R6	A.6
444638	GMT0240A	A.22
444639	GMT0400A	A.22
444640	GMT0440A	A.22
444641	GMT0024DR	A.24
444642	GMT0048DR	A.24
444643	GMT0060DR	A.24
444644	GMT0110DR	A.24
444645	GMT0220DR	A.24
444646	GMT0250DR	A.24
444647	GMT0048AR	A.24
444648	GMT0120AR	A.24
444649	GMT0240AR	A.24
444650	GMT0400AR	A.24
444651	GMT0440AR	A.24
444656	GTAS4	A.22
444658	GTAS3R	A.24
444659	GTAS4R	A.24
444660	GTBAT1	A.22
444661	GTBATS1	A.22
444665	GTBPRO	A.23
444666	GTBRON	A.23
444667	GTPBD	A.27
444668	GTCPRO	A.23
444669	GTCRON	A.23
444674	GTREPM	A.27
444675	GTI2FAD	A.23
444676	GTI2WAD	A.23
444677	GTI3FB	A.23
444678	GTI3WB	A.23
444679	GTI3FC	A.23
444680	GTI3WC	A.23
444681	GTI3FDT	A.23
444682	GTI3WDT	A.23
444690	GT16K2FM	A.14
444691	GT16K2UM	A.14
444692	GT16K2HM	A.14
444693	GT16K5FM	A.14
444694	GT16K5UM	A.14
444695	GT16K5HM	A.14
444700	GT16K2FR	A.29
444701	GT16K2UR	A.29
444702	GT16K2HR	A.29
444703	GT16K5FR	A.29
444704	GT16K5UR	A.29
444705	GT16K5HR	A.29
444710	GTHDTUF	A.32
444791	GTCPS1R	A.24
444793	GTCPS2R	A.24
444795	GTCPSAR	A.24
444800	GT16KCLS	A.32
444801	GT16KCHT	A.32
444802	GT16KARC	A.32
444804	GTFAL	A.32
444805	GTDPRF	A.27
444806	GTPRW	A.27

Unelec Equipment
www.unelec-equipment.com
Tel: +1 319 244 84 69 UeeS Co. Tel: +1 650 466 86 39
Info@unelec-equipment.com

By catalogue number

Cat. No.	Ref. No.	Page
G0...		
G04HNCT	408300	A.28
G04HNRC	408000	A.28
G07HNCT	408301	A.28
G07HNRC	408001	A.28
G08HNCT	408302	A.28
G08HNRC	408002	A.28
G1...		
G10HNCT	408303	A.28
G10HNRC	408003	A.28
G13HCLS	408097	A.32
G13HNCT	408304	A.28
G13HNRC	408004	A.28
G16H4ED	407930	A.26
G16H4FFI	408060	A.7
G16H4RVI	408058	A.7
G16H6ED	407931	A.26
G16H6FFI	408062	A.7
G16H6RVI	408082	A.7
G16HCLS	408100	A.32
G16HNCT	408305	A.28
G16HNRC	408005	A.28
G2...		
G20H2SSL	407606	A.32
G20H4ED	407932	A.26
G20H4FFI	408061	A.7
G20H4RVI	408059	A.7
G20H5SSL	407607	A.32
G20H6ED	407933	A.26
G20H6FFI	408063	A.7
G20H6RVI	408083	A.7
G20HARC	408098	A.32
G20HCHT	408102	A.32
G20HCLS	408103	A.32
G20HNCT	408006	A.28
G20HNRC	408006	A.28
G20MCLS	408106	A.32
G20NARC	408104	A.32
G25MCLS	408109	A.32
G25MNCT	408322	A.28
G25MNRC	408162	A.28
G3...		
G32LNCT	408331	A.28
G32LNRC	408186	A.28
G32M4FFI	408066	A.7
G32M4RVI	408070	A.7
G32M6FFI	408068	A.7
G32M6RVI	408071	A.7
G32MCLS	408117	A.32
G3G00KA-SR	408796	A.31
G4...		
G40LNCT	408332	A.28
G40LNRC	408187	A.28
G40M2SSL	407636	A.32
G40M4ED	407934	A.26
G40M4FFI	408067	A.7
G40M4RVI	408072	A.7
G40M5SSL	407637	A.32
G40M6ED	407935	A.26
G40M6FFI	408069	A.7
G40M6RVI	408074	A.7
G40MARC	408169	A.32
G40MCHT	408131	A.32
G40MCLS	408120	A.32
G40NARC	408172	A.32
G5...		
G50LCLS	408145	A.32
G50LNCT	408333	A.28
G50LNRC	408188	A.28
G54DR	408038	A.27
G6...		
G64L2SSL	407679	A.32
G64L4RVI	408073	A.7
G64L5SSL	407680	A.32
G64L6RVI	408075	A.7
G64LARC	408193	A.32
G64LCHT	408144	A.32
G64LCLS	408148	A.32
G64LNCT	408334	A.28
G64LNRC	408189	A.28
G64M4ED	407936	A.26
G64M6ED	407937	A.26
G7...		
G704R1	444585	A.12

Cat. No.	Ref. No.	Page
G704R3	444600	A.12
G704R4	444616	A.6
G704R6	444632	A.6
G707R1	444586	A.12
G707R3	444601	A.12
G707R4	444617	A.6
G707R6	444633	A.6
G708R1	444587	A.12
G708R3	444602	A.12
G708R4	444618	A.6
G708R6	444634	A.6
G710R1	444588	A.12
G710R3	444603	A.12
G710R4	444619	A.6
G710R6	444635	A.6
G713R1	444589	A.12
G713R3	444604	A.12
G713R4	444620	A.6
G713R6	444636	A.6
G716R1	444590	A.12
G716R3	444605	A.12
G716R4	444621	A.6
G716R6	444637	A.6
GA...		
GAPU	408789	A.26
GAS3R	407880	A.24
GAS5	407886	A.22
GAS5R	407881	A.24
GAS6	407887	A.22
GAS6R	407882	A.24
GAS8	407888	A.22
GAS8R	407883	A.24
GB...		
GBAT1	407891	A.22
GBAT1R	407889	A.24
GBATS1	407890	A.22
GBCAS	407970	A.23
GBCASR	407967	A.25
GBPRO	407978	A.23
GBPROR	407979	A.25
GBRON	407971	A.23
GBRONR	407968	A.25
GC...		
GCAS	407986	A.25
GCB1	407990	A.26
GCB2	407991	A.26
GCB3	407992	A.26
GCB4	407993	A.26
GCB5	407994	A.26
GCB6	407995	A.26
GCB7	407996	A.26
GCCC024D	407836	A.22
GCCC024DR	407835	A.24
GCCC048	407838	A.22
GCCC048R	407837	A.24
GCCC060D	407840	A.22
GCCC060DR	407839	A.24
GCCC120	407842	A.22
GCCC120R	407841	A.24
GCCC240	407844	A.22
GCCC240R	407843	A.24
GCCC277	407849	A.22
GCCC277R	407850	A.24
GCCC400A	407852	A.22
GCCC400AR	407851	A.24
GCCC440A	407853	A.22
GCCC440AR	407854	A.24
GCCN024D	407861	A.22
GCCN024DR	407860	A.24
GCCN048	407863	A.22
GCCN048R	407862	A.24
GCCN060D	407865	A.22
GCCN060DR	407864	A.24
GCCN120	407867	A.22
GCCN120R	407866	A.24
GCCN240	407869	A.22
GCCN240R	407868	A.24
GCCN277	407870	A.22
GCCN277R	407871	A.24
GCCN400A	407877	A.22
GCCN400AR	407876	A.24
GCCN440A	407878	A.22
GCCN440AR	407879	A.24
GCNTW	408036	A.27

Cat. No.	Ref. No.	Page
GCPRO	407980	A.23
GCPROR	407981	A.25
GCPS1R	407924	A.24
GCPS2R	407925	A.24
GCPSAR	407056	A.24
GCRON	407976	A.23
GCRONR	407974	A.25
GCSP1	407895	A.22
GCSP1R	407915	A.24
GCSP2	407896	A.22
GCSP2R	407916	A.24
GD...		
GDPRF	408025	A.27
GDPRW	408026	A.27
GF...		
GFA4	408028	A.32
GFMTG	408085	A.7
GG...		
GG04E1	407001	A.9
GG04E3	407002	A.9
GG04E4	407003	A.4
GG04E6	407004	A.4
GG04H1	407005	A.9
GG04H3	407006	A.9
GG04H4	407007	A.4
GG04H6	407008	A.4
GG04M1	407009	A.10
GG04M3	407010	A.10
GG04M4	407011	A.5
GG04M6	407012	A.5
GG04N1	407013	A.9
GG04N3	407014	A.9
GG04N4	407015	A.4
GG04N6	407016	A.4
GG04S1	407017	A.9
GG04S3	407018	A.9
GG04S4	407019	A.4
GG04S6	407020	A.4
GG07E1	407030	A.9
GG07E3	407031	A.9
GG07E4	407032	A.4
GG07E6	407033	A.4
GG07H1	407034	A.9
GG07H3	407035	A.9
GG07H4	407036	A.4
GG07H6	407037	A.4
GG07M1	407038	A.10
GG07M3	407039	A.10
GG07M4	407040	A.5
GG07M6	407041	A.5
GG07N1	407042	A.9
GG07N3	407043	A.9
GG07N4	407044	A.4
GG07N6	407045	A.4
GG07S1	407046	A.9
GG07S3	407047	A.9
GG07S4	407048	A.4
GG07S6	407049	A.4
GG08E1	407060	A.9
GG08E3	407061	A.9
GG08E4	407062	A.4
GG08E6	407063	A.4
GG08H1	407064	A.9
GG08H3	407065	A.9
GG08H4	407066	A.4
GG08H6	407067	A.4
GG08M1	407068	A.10
GG08M3	407069	A.10
GG08M4	407070	A.5
GG08M6	407071	A.5
GG08N1	407072	A.9
GG08N3	407073	A.9
GG08N4	407074	A.4
GG08N6	407075	A.4
GG08S1	407076	A.9
GG08S3	407077	A.9
GG08S4	407078	A.4
GG08S6	407079	A.4
GG10E1	407090	A.9
GG10E3	407091	A.9
GG10E4	407092	A.4
GG10E6	407093	A.4
GG10H1	407094	A.9
GG10H3	407095	A.9

Cat. No.	Ref. No.	Page
GG10H4	407096	A.4
GG10H6	407097	A.4
GG10M1	407098	A.10
GG10M3	407099	A.10
GG10M4	407100	A.5
GG10M6	407101	A.5
GG10N1	407102	A.9
GG10N3	407103	A.9
GG10N4	407104	A.4
GG10N6	407105	A.4
GG10S1	407106	A.9
GG10S3	407107	A.9
GG10S4	407108	A.4
GG10S6	407109	A.4
GG13E1	407120	A.9
GG13E3	407121	A.9
GG13E4	407122	A.4
GG13E6	407123	A.4
GG13H1	407124	A.9
GG13H3	407125	A.9
GG13H4	407126	A.4
GG13H6	407127	A.4
GG13M1	407128	A.10
GG13M3	407129	A.10
GG13M4	407130	A.5
GG13M6	407131	A.5
GG13N1	407132	A.9
GG13N3	407133	A.9
GG13N4	407134	A.4
GG13N6	407135	A.4
GG13S1	407136	A.9
GG13S3	407137	A.9
GG13S4	407138	A.4
GG13S6	407139	A.4
GG16E1	407150	A.9
GG16E3	407151	A.9
GG16E4	407152	A.4
GG16E6	407153	A.4
GG16H1	407154	A.9
GG16H2FM	408200	A.14
GG16H2FR	407610	A.29
GG16H2UM	408202	A.14
GG16H2UR	407612	A.29
GG16H3	407155	A.9
GG16H4	407156	A.4
GG16H5FM	408203	A.14
GG16H5FR	407613	A.29
GG16H5UM	408205	A.14
GG16H5UR	407615	A.29
GG16H6	407157	A.4
GG16M1	407158	A.10
GG16M3	407159	A.10
GG16M4	407160	A.5
GG16M6	407161	A.5
GG16N1	407162	A.9
GG16N3	407163	A.9
GG16N4	407164	A.4
GG16N6	407165	A.4
GG16S1	407166	A.9
GG16S2FM	407626	A.14
GG16S2FR	407627	A.29
GG16S2UM	407616	A.14
GG16S2UR	407617	A.29
GG16S3	407167	A.9
GG16S4	407168	A.4
GG16S5FM	407628	A.14
GG16S5FR	407629	A.29
GG16S5UM	407618	A.14
GG16S5UR	407619	A.29
GG16S6	407169	A.4
GG20E1	407190	A.9
GG20E3	407191	A.9
GG20E4	407192	A.4
GG20E6	407193	A.4
GG20H1	407194	A.9
GG20H2FM	408210	A.14
GG20H2FR	407620	A.29
GG20H2UM	408212	A.14
GG20H2UR	407622	A.29
GG20H3	407195	A.9
GG20H4	407196	A.4
GG20H5FM	408213	A.14
GG20H5FR	407623	A.29
GG20H5UM	408215	A.14

By catalogue number

Cat. No.	Ref. No.	Page
GG20H5UR	407625	A.29
GG20H6	407197	A.4
GG20M1	407198	A.10
GG20M2FM	408222	A.14
GG20M2FR	407630	A.29
GG20M2UM	408224	A.14
GG20M2UR	407632	A.29
GG20M3	407199	A.10
GG20M4	407200	A.5
GG20M5FM	408225	A.14
GG20M5FR	407633	A.29
GG20M5UM	408227	A.14
GG20M5UR	407635	A.29
GG20M6	407201	A.5
GG20N1	407202	A.9
GG20N3	407203	A.9
GG20N4	407204	A.4
GG20N6	407205	A.4
GG20S1	407206	A.9
GG20S3	407207	A.9
GG20S4	407208	A.4
GG20S6	407209	A.4
GG25H1	407230	A.9
GG25H3	407231	A.9
GG25H4	407232	A.4
GG25H6	407233	A.4
GG25M1	407234	A.10
GG25M2FM	408234	A.14
GG25M2FR	407640	A.29
GG25M2UM	408236	A.14
GG25M2UR	407642	A.29
GG25M3	407235	A.10
GG25M4	407236	A.5
GG25M5FM	408237	A.14
GG25M5FR	407643	A.29
GG25M5UM	408239	A.14
GG25M5UR	407645	A.29
GG25M6	407237	A.5
GG25N1	407238	A.9
GG25N3	407239	A.9
GG25N4	407240	A.4
GG25N6	407241	A.4
GG32G1	407250	A.10
GG32G3	407251	A.10
GG32G4	407252	A.5
GG32G6	407253	A.5
GG32H1	407242	A.9
GG32H3	407273	A.9
GG32H4	407244	A.4
GG32H6	407245	A.4
GG32L1	407248	A.10
GG32L3	407249	A.10
GG32L4	407254	A.5
GG32L6	407255	A.5
GG32M1	407260	A.10
GG32M2FM	408245	A.14
GG32M2FR	407650	A.29
GG32M2UM	408247	A.14
GG32M2UR	407652	A.29
GG32M4	407262	A.5
GG32M5FM	408249	A.14
GG32M5FR	407654	A.29
GG32M5UM	408251	A.14
GG32M5UR	407656	A.29
GG32M6	407263	A.5
GG32N1	407264	A.9
GG32N3	407265	A.9
GG32N4	407266	A.4
GG32N6	407267	A.4
GG40G1	407268	A.10
GG40G3	407269	A.10
GG40G4	407270	A.5
GG40G6	407271	A.5
GG40H1	407278	A.9
GG40H3	407279	A.9
GG40H4	407280	A.4
GG40H6	407281	A.4
GG40L1	407282	A.10
GG40L3	407283	A.10
GG40L4	407284	A.5
GG40L6	407285	A.5
GG40M1	407286	A.10
GG40M2FM	408257	A.14

Cat. No.	Ref. No.	Page
GG40M2FR	407658	A.29
GG40M2UM	408259	A.14
GG40M2UR	407666	A.29
GG40M3	407287	A.10
GG40M4	407288	A.5
GG40M5FM	408261	A.14
GG40M5FR	407668	A.29
GG40M5UM	408263	A.14
GG40M5UR	407670	A.29
GG40M6	407289	A.5
GG40N1	407290	A.9
GG40N3	407291	A.9
GG40N4	407292	A.4
GG40N6	407293	A.4
GG50L1	407300	A.10
GG50L3	407301	A.10
GG50L4	407302	A.5
GG50L6	407303	A.5
GG50M1	407304	A.10
GG50M3	407305	A.10
GG50M4	407306	A.5
GG50M6	407307	A.5
GG64L1	407320	A.10
GG64L2UM	408281	A.14
GG64L2UR	407686	A.29
GG64L3	407321	A.10
GG64L4	407322	A.5
GG64L5UM	408283	A.14
GG64L5UR	407688	A.29
GG64L6	407323	A.5
GG64M1	407324	A.10
GG64M3	407325	A.10
GG64M4	407326	A.5
GG64M6	407327	A.5
GGM3M3	407261	A.10
GH...		
GH32H1	407346	A.11
GH32H3	407347	A.11
GH32M1	407348	A.11
GH32M2VM	408292	A.14
GH32M2VR	408254	A.29
GH32M3	407349	A.11
GH32M5VM	408293	A.14
GH32M5VR	408255	A.29
GH32N1	407350	A.11
GH32N3	407351	A.11
GH40H1	407352	A.11
GH40H3	407353	A.11
GH40M1	407354	A.11
GH40M2VM	408294	A.14
GH40M2VR	408267	A.29
GH40M3	407355	A.11
GH40M5VM	408295	A.14
GH40M5VR	408268	A.29
GH40N1	407356	A.11
GH40N3	407357	A.11
GI...		
GI2FAD	407900	A.23
GI2WAD	407901	A.23
GI3FB	407902	A.23
GI3FC	407904	A.23
GI3FDT	407906	A.23
GI3WB	407903	A.23
GI3WC	407905	A.23
GI3WDT	407907	A.23
GJ...		
GJ04S1	407378	A.12
GJ04S3	407379	A.12
GJ04S4	407380	A.6
GJ04S6	407381	A.6
GJ07S1	407398	A.12
GJ07S3	407399	A.12
GJ07S4	407400	A.6
GJ07S6	407401	A.6
GJ08S1	407418	A.12
GJ08S3	407419	A.12
GJ08S4	407420	A.6
GJ08S6	407421	A.6
GJ10S1	407438	A.12
GJ10S3	407439	A.12
GJ10S4	407440	A.6
GJ10S6	407441	A.6
GJ13S1	407458	A.12

Cat. No.	Ref. No.	Page
GJ13S3	407459	A.12
GJ13S4	407460	A.6
GJ13S6	407461	A.6
GJ16S1	407478	A.12
GJ16S3	407479	A.12
GJ16S4	407480	A.6
GJ16S6	407481	A.6
GJ20S1	407498	A.12
GJ20S3	407499	A.12
GJ20S4	407500	A.6
GJ20S6	407501	A.6
GJ25N1	407518	A.12
GJ25N3	407519	A.12
GJ25N4	407520	A.6
GJ25N6	407521	A.6
GJ32L1	407533	A.12
GJ32L3	407534	A.12
GJ32L4	407535	A.6
GJ32L6	407536	A.6
GJ32N1	407537	A.12
GJ32N3	407538	A.12
GJ32N4	407539	A.6
GJ32N6	407540	A.6
GJ40L1	407554	A.12
GJ40L3	407555	A.12
GJ40L4	407556	A.6
GJ40L6	407557	A.6
GJ40N1	407558	A.12
GJ40N3	407559	A.12
GJ40N4	407560	A.6
GJ40N6	407561	A.6
GJ50L1	407565	A.12
GJ50L3	407566	A.12
GJ50L4	407567	A.6
GJ50L6	407568	A.6
GJ64L1	407575	A.12
GJ64L3	407576	A.12
GJ64L4	407577	A.6
GJ64L6	407578	A.6
GJP	408057	A.27
GK...		
GK32N1	407591	A.13
GK32N3	407592	A.13
GK40N1	407595	A.13
GK40N3	407596	A.13
GL...		
GLB1	408045	A.27
GLB3	408049	A.27
GLHD	408039	A.27
GM...		
GM01024D	407700	A.22
GM01024DR	407701	A.24
GM01048A	407710	A.22
GM01048D	407702	A.22
GM01048DR	407703	A.24
GM01060D	407704	A.22
GM01060DR	407705	A.24
GM01110D	407706	A.22
GM01110DR	407707	A.24
GM01120A	407712	A.22
GM01120DR	407713	A.24
GM01220D	407720	A.22
GM01220DR	407721	A.24
GM01240A	407714	A.22
GM01240DR	407715	A.24
GM01250D	407708	A.22
GM01250DR	407709	A.24
GM01400A	407716	A.22
GM01400DR	407717	A.24
GM01440A	407718	A.22
GM01440DR	407719	A.24
GM02024D	407725	A.22
GM02024DR	407726	A.24
GM02048A	407735	A.22
GM02048D	407727	A.22
GM02048DR	407728	A.24
GM02060D	407729	A.22
GM02060DR	407730	A.24
GM02110D	407731	A.22
GM02110DR	407732	A.24
GM02120A	407737	A.22
GM02120DR	407738	A.24
GM02220D	407722	A.22

Cat. No.	Ref. No.	Page
GM02220DR	407723	A.24
GM02240A	407739	A.22
GM02240DR	407740	A.24
GM02250D	407733	A.22
GM02250DR	407734	A.24
GM02400A	407741	A.22
GM02400DR	407742	A.24
GM02440A	407743	A.22
GM02440DR	407744	A.24
GMCN	408035	A.23
GMCNR	408033	A.25
GMPU1	408790	A.26
GMPU2	408791	A.26
GMPU3	408792	A.26
GMT0024D	444630	A.22
GMT0024DR	444641	A.24
GMT0048A	444247	A.22
GMT0048AR	444647	A.24
GMT0048D	444631	A.22
GMT0048DR	444642	A.24
GMT0060D	444248	A.22
GMT0060DR	444643	A.24
GMT0110D	444249	A.22
GMT0110DR	444644	A.24
GMT0120A	444250	A.22
GMT0120AR	444648	A.24
GMT0220D	444251	A.22
GMT0220DR	444645	A.24
GMT0240A	444638	A.22
GMT0240AR	444649	A.24
GMT0250D	444252	A.22
GMT0250DR	444646	A.24
GMT0400A	444639	A.22
GMT0400AR	444650	A.24
GMT0440A	444640	A.22
GMT0440AR	444651	A.24
GN...		
GNTK120	407753	A.22
GNTK240	407754	A.22
GP...		
GPBD	408040	A.27
GPRO	407987	A.25
GR...		
GREPM	408041	A.27
GRHD	408042	A.27
GRHN	408043	A.32
GRON	407985	A.25
GRONCS	407984	A.32
GRRC024D	407760	A.22
GRRC110	407762	A.22
GRRC230	407764	A.22
GRTC1	407897	A.22
GRTC2	407899	A.22
GRTC3	407894	A.22
GRTC4	407911	A.22
GRTC5	407912	A.22
GRTC6	407913	A.22
GS...		
GSDWTR	408054	A.32
GSFDTR1	408052	A.32
GSFDTR2	408030	A.32
GSST024	407789	A.22
GSST024R	407790	A.24
GSST120	407791	A.22
GSST120R	407792	A.24
GSST240	407793	A.22
GSST240R	407794	A.24
GSTR024D	407770	A.22
GSTR048	407772	A.22
GSTR060D	407774	A.22
GSTR120	407776	A.22
GSTR240	407778	A.22
GSTR277	407780	A.22
GSTR400A	407782	A.22
GSTR440A	407784	A.22
GT...		
GT04K1	444506	A.9
GT04K3	444526	A.9
GT04K4	444548	A.4
GT04K6	444569	A.4
GT04R1	444500	A.9
GT04R3	444520	A.9
GT04R4	444542	A.4

Unelec Equipment
www.unelec-equipment.com
Tel: +1 319 244 84 69 UeeS Co. Tel: +1 650 466 86 39
Info@unelec-equipment.com

Cat. No.	Ref. No.	Page
GT04R6	444563	A.4
GT07K1	444507	A.9
GT07K3	444527	A.9
GT07K4	444549	A.4
GT07K6	444570	A.4
GT07R1	444501	A.9
GT07R3	444521	A.9
GT07R4	444543	A.4
GT07R6	444564	A.4
GT08K1	444508	A.9
GT08K3	444528	A.9
GT08K4	444550	A.4
GT08K6	444571	A.4
GT08R1	444502	A.9
GT08R3	444522	A.9
GT08R4	444544	A.4
GT08R6	444565	A.4
GT10K1	444509	A.9
GT10K3	444529	A.9
GT10K4	444551	A.4
GT10K6	444572	A.4
GT10R1	444503	A.9
GT10R3	444523	A.9
GT10R4	444545	A.4
GT10R6	444566	A.4
GT13K1	444510	A.9
GT13K3	444530	A.9
GT13K4	444552	A.4
GT13K6	444573	A.4
GT13R1	444504	A.9
GT13R3	444524	A.9
GT13R4	444546	A.4
GT13R6	444567	A.4
GT16H4FFI	444625	A.7
GT16H4RVI	444626	A.7
GT16H6FFI	444627	A.7
GT16H6RVI	444628	A.7
GT16K1	444511	A.9
GT16K2FM	444690	A.14
GT16K2FR	444700	A.29
GT16K2HM	444692	A.14
GT16K2HR	444702	A.29
GT16K2UM	444691	A.14
GT16K2UR	444701	A.29
GT16K3	444531	A.9
GT16K4	444553	A.4
GT16K5FM	444693	A.14
GT16K5FR	444703	A.29
GT16K5HM	444695	A.14
GT16K5HR	444705	A.29
GT16K5UM	444694	A.14
GT16K5UR	444704	A.29
GT16K6	444574	A.4
GT16KARC	444802	A.32
GT16KCHT	444801	A.32
GT16KCLS	444800	A.32
GT16N2SSL	444253	A.32
GT16N5SSL	444254	A.32
GT16R1	444505	A.9
GT16R3	444525	A.9
GT16R4	444547	A.4
GT16R6	444568	A.4
GTAS3R	444658	A.24
GTAS4	444656	A.22
GTAS4R	444659	A.24
GTBAT1	444660	A.22
GTBAT1R	444660	A.24
GTBATS1	444661	A.22
GTBPRO	444665	A.23
GTBRON	444666	A.23
GTCPRO	444668	A.23
GTCPS1R	444791	A.24
GTCPS2R	444793	A.24
GTCPSAR	444795	A.24
GTCRON	444669	A.23
GTDM048A	407816	A.26
GTDM060D	407817	A.26
GTDM120A	407818	A.26
GTDM120D	407819	A.26
GTDM240A	407820	A.26
GTDM240D	407821	A.26
GTDM250D	407823	A.26
GTDM277A	407822	A.26

Cat. No.	Ref. No.	Page
GTDM400A	407824	A.26
GTDM440A	407825	A.26
GTDPRF	444805	A.27
GTFAL	444804	A.32
GTG00K1-SF	408800	A.15
GTG00K2-SF	408801	A.15
GTG00K2-SR	408802	A.30
GTG00K3-2SF	408807	A.15
GTG00K3-4SF	408815	A.16
GTG00K3-SF	408805	A.15
GTG00K3T6SF	408817	A.16
GTG00K4-2SF	408808	A.15
GTG00K4-2SR	408809	A.30
GTG00K4-4SF	408816	A.16
GTG00K4-SF	408806	A.15
GTG00K4T6SF	408818	A.16
GTG00K4T6SR	408819	A.30
GTG00K9-4SF	408813	A.16
GTG00K9-SF	408803	A.15
GTG00N5-5SF	408825	A.17
GTG00N5-8SF	408833	A.17
GTG00N5-9SF	408841	A.17
GTG00N5T5SF	408829	A.17
GTG00N5T8SF	408837	A.17
GTG00N5T8SR	408849	A.31
GTG00N5T9SF	408845	A.17
GTG00N5T9SR	408853	A.31
GTG00N6-5SF	408826	A.19
GTG00N6-8SF	408834	A.19
GTG00N6-9SF	408842	A.19
GTG00N6T5SF	408830	A.19
GTG00N6T8SF	408838	A.19
GTG00N6T8SR	408850	A.31
GTG00N6T9SF	408846	A.19
GTG00N6T9SR	408854	A.31
GTG00N7-5SF	408827	A.18
GTG00N7-8SF	408835	A.18
GTG00N7-9SF	408843	A.18
GTG00N7T5SF	408831	A.18
GTG00N7T8SF	408839	A.18
GTG00N7T8SR	408851	A.31
GTG00N7T9SF	408847	A.18
GTG00N7T9SR	408855	A.31
GTG00N8-5SF	408828	A.19
GTG00N8-8SF	408836	A.19
GTG00N8-9SF	408844	A.19
GTG00N8T5SF	408832	A.19
GTG00N8T8SF	408840	A.19
GTG00N8T8SR	408852	A.31
GTG00N8T9SF	408848	A.19
GTG00N8T9SR	408856	A.31
GTG00N9-5SF	408823	A.17
GTG00N9-8SF	408863	A.17
GTG00N9-9SF	408865	A.17
GTG00ND-5SF	408755	A.20
GTG00ND-8SF	408756	A.20
GTG00ND-9SF	408757	A.20
GTG00NDT5SF	408750	A.20
GTG00NDT8SF	408751	A.20
GTG00NDT9SF	408753	A.20
GTG00NF-5SF	408763	A.20
GTG00NF-8SF	408764	A.20
GTG00NF-9SF	408765	A.20
GTG00NFT8SF	408759	A.20
GTG00NFT9SF	408761	A.20
GTHDTUF	444710	A.32
GTI2FAD	444675	A.23
GTI2WAD	444676	A.23
GTI3FB	444677	A.23
GTI3FC	444679	A.23
GTI3FDT	444681	A.23
GTI3WB	444678	A.23
GTI3WC	444680	A.23
GTI3WDT	444682	A.23
GTJP	444255	A.27
GTLHD	444256	A.27
GTPBD	444667	A.27
GTPRW	444806	A.27
GTPUNI	408860	A.15
GTREPM	444674	A.27
GTRHD	444257	A.27
GTSDFTR	444258	A.32
GTSDWTR	444259	A.32

Cat. No.	Ref. No.	Page
GTUS	408046	A.26
GTUTK20	407999	A.26
GTUTK20S	407081	A.26
GTUTKS	407083	A.26
GU...		
GUNI	408047	A.32
GUVT024D	407795	A.22
GUVT024DR	407796	A.24
GUVT048	407797	A.22
GUVT048R	407798	A.24
GUVT060D	407799	A.22
GUVT060DR	407800	A.24
GUVT120	407801	A.22
GUVT120R	407802	A.24
GUVT240	407803	A.22
GUVT240R	407804	A.24
GUVT277	407805	A.22
GUVT277R	407806	A.24
GUVT400A	407807	A.22
GUVT400AR	407808	A.24
GUVT440A	407809	A.22
GUVT440AR	407810	A.24
GW...		
GW04M1	408400	A.12
GW04M3	408401	A.12
GW04M4	408350	A.6
GW04M6	408351	A.6
GW04N1	407374	A.12
GW04N3	407375	A.12
GW04N4	407376	A.6
GW04N6	407377	A.6
GW07M1	408402	A.12
GW07M3	408403	A.12
GW07M4	408352	A.6
GW07M6	408353	A.6
GW07N1	407394	A.12
GW07N3	407395	A.12
GW07N4	407396	A.6
GW07N6	407397	A.6
GW08M1	408404	A.12
GW08M3	408405	A.12
GW08M4	408354	A.6
GW08M6	408355	A.6
GW08N1	407414	A.12
GW08N3	407415	A.12
GW08N4	407416	A.6
GW08N6	407417	A.6
GW10M1	408406	A.12
GW10M3	408407	A.12
GW10M4	408356	A.6
GW10M6	408357	A.6
GW10N1	407434	A.12
GW10N3	407435	A.12
GW10N4	407436	A.6
GW10N6	407437	A.6
GW13M1	408408	A.12
GW13M3	408409	A.12
GW13M4	408358	A.6
GW13M6	408359	A.6
GW13N1	407454	A.12
GW13N3	407455	A.12
GW13N4	407456	A.6
GW13N6	407457	A.6
GW16M1	408410	A.12
GW16M3	408411	A.12
GW16M4	408360	A.6
GW16M6	408361	A.6
GW16N1	407474	A.12
GW16N3	407475	A.12
GW16N4	407476	A.6
GW16N6	407477	A.6
GW20M1	408412	A.12
GW20M3	408413	A.12
GW20M4	408362	A.6
GW20M6	408363	A.6
GW20N1	407494	A.12
GW20N3	407495	A.12
GW20N4	407496	A.6
GW20N6	407497	A.6
GW25M1	408414	A.12
GW25M3	408415	A.12
GW25M4	408364	A.6
GW25M6	408365	A.6

Cat. No.	Ref. No.	Page
GW32M1	408416	A.12
GW32M3	408417	A.12
GW32M4	408366	A.6
GW32M6	408367	A.6
GW40M1	408418	A.12
GW40M3	408419	A.12
GW40M4	408368	A.6
GW40M6	408369	A.6
GZ...		
GZ32H1	407589	A.13
GZ32H3	407590	A.13
GZ40H1	407593	A.13
GZ40H3	407594	A.13

The policy of GE is one of continuous improvement.
The right is reserved to alter the design or any structural details of the products at any time without giving notice.

Mai 2014
GE Industrial Solutions

Unelec Equipment
www.unelec-equipment.com
Tel: +1 319 244 84 69 UeeS Co. Tel: +1 650 466 86 39
Info@unelec-equipment.com

Notes

GE
Industrial Solutions

111847

GE Industrial Solutions is a first class global supplier of low and medium voltage products including wiring devices, residential and industrial electrical distribution components, automation products, enclosures and switchboards. Demand for the company's products comes from wholesalers, installers, panelboard builders, contractors, OEMs and utilities worldwide.

GE imagination at work

Unelec Equipment
www.unelec-equipment.com
Tel: +1 319 244 84 69 UeeS Co. Tel: +1 650 466 86 39
Info@unelec-equipment.com